GLOVE CONTROLLER with FORCE and TACTILE FEEDBACK for DEXTEROUS ROBOTIC HANDS

Phase II SBIR Final Report

31 May, 1995

Contact: Steve Begej, Begej Corporation, 5 Claret Ash, Littleton, CO 80127
email: stevebegej@yahoo.com or sb@mechanismworkshop.com
http://www.mechanismworkshop.com/AboutSteve/Publications/sb_tech_pubs.html

Principal Investigator: Stefan Begej

Performing Organization:
BEGEJ CORPORATION
5 Claret Ash Road
Littleton, CO 80127-3636
Tel/FAX: (303) 932-2186

BC Report Number: GC-170595FR

This work was performed under Phase II Small Business Innovation Research contract NAS9-18558 sponsored by NASA, Johnson Space Center, Houston, TX 77058.

GLOVE CONTROLLER with FORCE and TACTILE FEEDBACK for DEXTEROUS ROBOTIC HANDS

Project Summary

The overall objective of this contract was to explore feasibility of designing an advanced laboratory prototype of a three-fingered exoskeletal glove controller for dexterous robotic hands featuring force, position, and tactile feedback at each finger. Task 1 consisted of evaluating the performance capabilities of the 3-DOF Phase-I prototype finger controller, and refining the torque and angle sensors. Task 2 concerned the design of a new glove controller utilizing the advancements achieved during the previous task. Task 3 dealt with further development and enhancement of the associated tactile telepresence system for the fingertips.

Task 1 was successfully accomplished, and resulted in the delivery of an upgraded single-finger master system, associated single-joint slave, and a tactile telepresence system for a single fingertip. Task 2 efforts produced a CAD design for the thumb joint, and gave encouragement to the conclusion that the general concept of using virtual joints for the glove controller was feasible. However, limitations of the available in-house design tools and difficulties re-designing the torque sensor prevented completion of the glove design and its subsequent fabrication. Task 3 efforts resulted in the fabrication of three tactile display driver modules, but not of an entire tactile telepresence system. Additionally, the feasibility of creating new smaller microtaxels and a flexible substrate for the fingertip tactile display was demonstrated.

Potential commercial applications of this research includes space-based construction and maintenance, underwater salvage or mining, remote surgery, cleanroom operations in the electronic, biological, and pharmaceutical industries, hazardous waste handling and site cleanup, high-fidelity aircraft and other vehicle simulators, and games involving virtual reality themes.

RIGHTS NOTICE

SBIR RIGHTS NOTICE (APR 1985)

This SBIR data is furnished with SBIR rights under NASA contract NAS9-18558. For a period of two years after acceptance of all items to be delivered under this contract the Government agrees to use this data for Government purposes only, and it shall not be disclosed outside the Government during such period without permission of the Contractor, except that, subject to the foregoing use and disclosure prohibitions, such data may be disclosed for use by support contractors. After the aforesaid two-year period the Government has a royalty-free license to use, and to authorize others use on its behalf, this data for Government purposes, but is relieved of all disclosure prohibitions and assumes no liability for unauthorized use of this data by third parties. This Notice shall be affixed to any reproductions of this data, in whole or in part.

TABLE OF CONTENTS

Summary ii

SBIR Rights Notice iii

Table of Contents iv

1. INTRODUCTION 1

2. UPGRADE of the PHASE-I PROTOTYPE 2
    2.1 Angle Sensor 4
    2.2 Force Sensor 14
    2.3 Signal Conditioning Boards 18
    2.4 Motor Driver Boards 21
    2.5 Evaluation 25

3. DESIGN of ADVANCED GLOVE CONTROLLER 30

4. DESIGN of ADVANCED TACTILE TELEPRESENCE SYSTEM ... 45
    4.1 Introduction 45
    4.2 Tactile Sensor 48
    4.3 Tactile Display 59
    4.4 Tactile Display Drivers 64
    4.5 PC-Based Tactile Data Processor 70

5. CONCLUSIONS REGARDING TECHNICAL FEASIBILITY 71

6. DIRECTIONS for FUTURE STUDY 72

APPENDIX A:
BLOCK, CIRCUIT and LAYOUT DRAWINGS of the SENSOR SIGNAL CONDITIONING BOARDS 76

APPENDIX B:
CALIBRATION PROCEDURE for the SENSOR SIGNAL CONDITIONING BOARDS 87

APPENDIX C:
OPERATION of the SINGLE-FINGER GLOVE CONTROLLER PROTOTYPE 108
C.1 Single-Finger Glove Controller Prototype 108
C.2 Fingertip Tactile Telepresence System Prototype 111

APPENDIX D:
MECHANICAL DRAWINGS of the PHASE-II THUMB JOINT COMPONENTS 112

APPENDIX E:
MECHANICAL DRAWINGS of the PHASE-II TACTILE SENSOR COMPONENTS 139

APPENDIX F:
MECHANICAL DRAWINGS of the PHASE-II TACTILE DISPLAY DRIVERS 150

APPENDIX G:
DRIVER MODULE MODIFICATIONS, ELECTRICAL SCHEMATICS and PCB LAYOUTS of PWM VALVE CONTROLLER CIRCUIT BOARD 182

1. INTRODUCTION

The overall objective of this contract was to explore feasibility of designing an advanced laboratory prototype of a three-fingered exoskeletal glove controller for dexterous robotic hands featuring force, position, and tactile feedback at each finger. Task 1 consisted of evaluating the performance capabilities of the 3-DOF Phase-I prototype finger controller, and refining the torque and angle sensors. Task 2 concerned the design of a new glove controller utilizing the advancements achieved during the previous task. Task 3 dealt with further development and enhancement of the associated tactile telepresence system for the fingertips.

Task 1 was successfully accomplished, and resulted in the delivery of an upgraded single-finger master system, associated single-joint slave, and a tactile telepresence system for a single fingertip. Task 2 efforts produced a CAD design for the thumb joint, and gave encouragement to the conclusion that the general concept of using virtual joints for the glove controller was feasible. However, limitations of the available in-house design tools and difficulties re-designing the torque sensor prevented completion of the glove design and its subsequent fabrication. Task 3 efforts resulted in the fabrication of three tactile display driver modules, but not of an entire tactile telepresence system. Additionally, the feasibility of creating new smaller microtaxels and a flexible substrate for the fingertip tactile display was demonstrated.

The work under Tasks 1, 2 and 3 are described in Sections 2, 3, and 4, respectively. Section 5 describes the conclusions regarding the overall technical feasibility of the project, where it was concluded that the general concept of using virtual joints for the glove controller was feasible though implementation would require additional effort supported by better CAD design tools for successful completion. Finally, Section 6 describes in detail the steps required to complete the project in the future.

2. UPGRADE of PHASE I PROTOTYPE

The objective of Task 1 was to complete the fabrication of the single-finger prototype initiated during Phase I, and to evaluate its capabilities and performance with a single-joint slave finger and mechanical master/slave manipulator system. The main elements of this task are listed below:

- Design and fabricate an improved, miniature, optical joint-angle encoder,
- Pursue further refinements of the optical joint-torque sensor,
- Install advanced versions of the joint-angle and torque sensors on the spherical joint associated with the master knuckle and distal joint of the slave finger,
- Refinement of the torque and joint-angle sensor conditioning boards, and fabrication of sufficient new boards to accommodate the sensor needs associated with the master and slave mechanisms,
- Fabrication of a duplicate motor driver board for the slave finger, and
- Implement simple, hardware-based methods by which to control the master controller and slave motors, including master/slave control algorithms, if possible.

The upgraded system after the above modifications and improvements is shown in Figure 1. The following sections describe in detail the work that was performed.

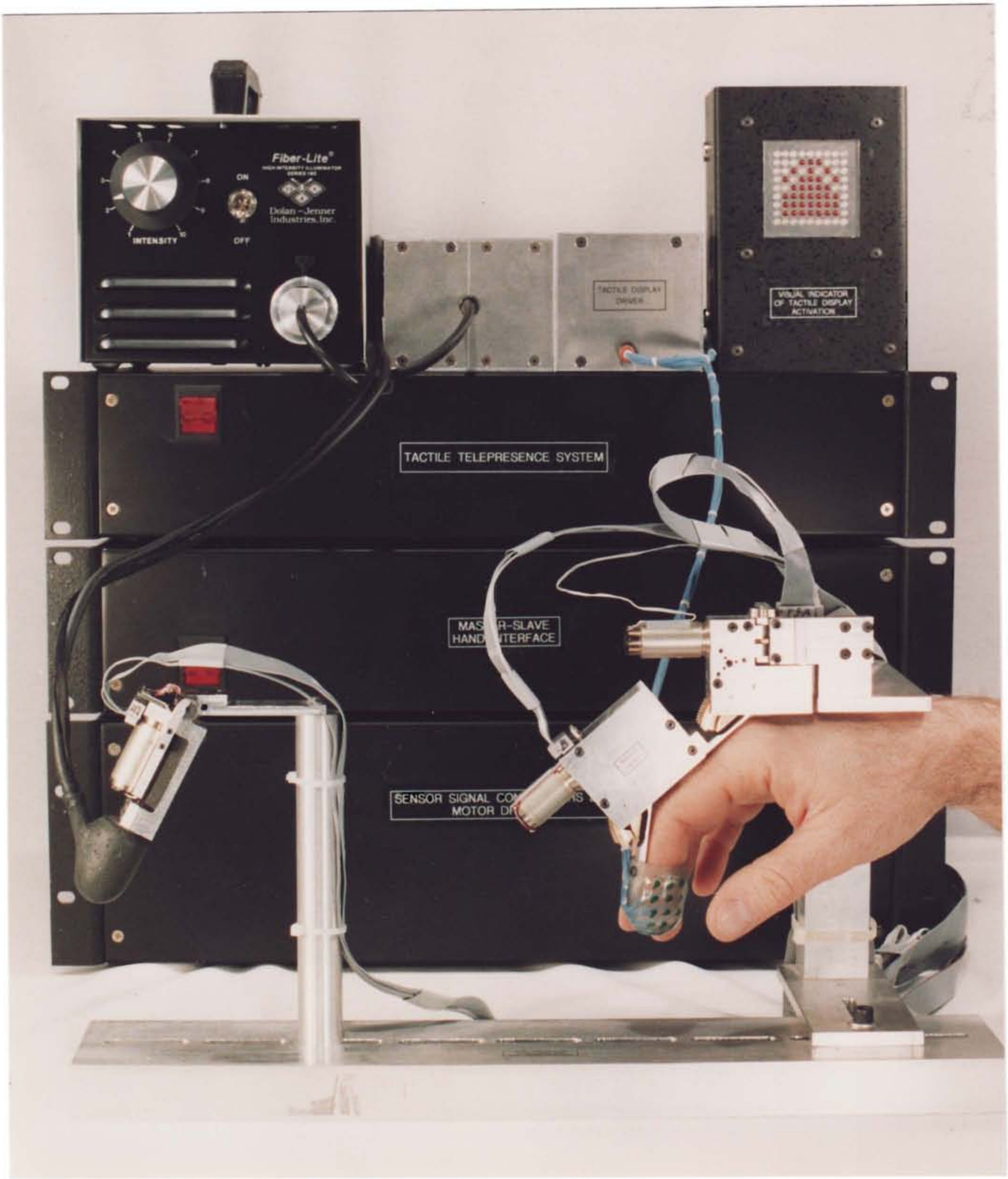

FIGURE 1: Upgraded Phase-I finger controller prototype (front-right), single-joint slave finger (front-left), and 37-taxel tactile telepresence system (sensor and display are attached to slave and master fingers, respectively). (Photo. GC110595A-17)

2.1 Angle Sensor

Unlike conventional joints, the virtual joint utilized in the master controller is without a physical center to which an angle encoder might be attached. Instead, an indirect method of angle determination was utilized in which the encoder was mounted on the idler gear that transmitted power from the worm to the joint slider gear. The required characteristics of the encoder were that it be small, have a high noise immunity (due to the local presence of PWM motor drive lines), and offer an analog output over a 300° rotation range. No off-the-shelf commercial units meeting all these requirements were available, so an optical device was designed using IRAD funds and subsequently fabricated during the Phase I. The principle of operation relied on the attenuation of a photoelectric signal by a circumferentially-graded optical filter disk. The Phase-II goal with regard to this sensor was to improve and stabilize the design so as to make available a standardized encoder unit for the entire master glove controller mechanism.

Photographs of the first encoder are shown in Figures 2.5-1 and 2.5-2 of the Phase-I Final Report. The body consisted of two identical brass halves held together with small 0-80 Allen cap screws at each of the four corners. The photoemitter and photodetector were mounted with epoxy adhesive on opposite sides of the filter wheel. Identical photoswitch units (Marktech MTRS-9080) were used in both cases, though the orientation reversed so as to couple the emitter of one unit with the detector of the other. The filter disk was fabricated by trial-and-error by taking a B&W photograph of a slowly-rotating, wedge-shaped electroluminescent panel whose intensity was linearly varied according to its angular position. After development and drying, the filter disk was cut directly from the film strip and attached with adhesive to the encoder hub. This unit performed well, but was not considered adequately compact, easy to fabricate, nor did it utilize the photoelectric devices efficiently.

After several design iterations, a new angle sensor was designed which utilized a single photoswitch unit (Marktech MTRS-9080) mounted on the edge of a circular encoder body. The unidirectional transmission mode of operation was retained, as it was much less sensitive to changes in surface reflection caused by variations in the filter wheel position or orientation. Photographs and mechanical drawings of the new angle encoder are shown in Figure 2 - 9. Instead of the “straight-through” light path utilized in the first version, integral reflectors machined into the body halves were used to direct the light from the emitter, through the encoder filter wheel, and then reflected again to the detector. This enabled the use of only a single photoswitch package, and simplified assembly as the photoswitch package could be pre-assembled onto its mount prior to snapping the components together. The primary assembly problem encountered was application of the adhesive (Loctite 324), as care was required to avoid migration of adhesive to the internal components.

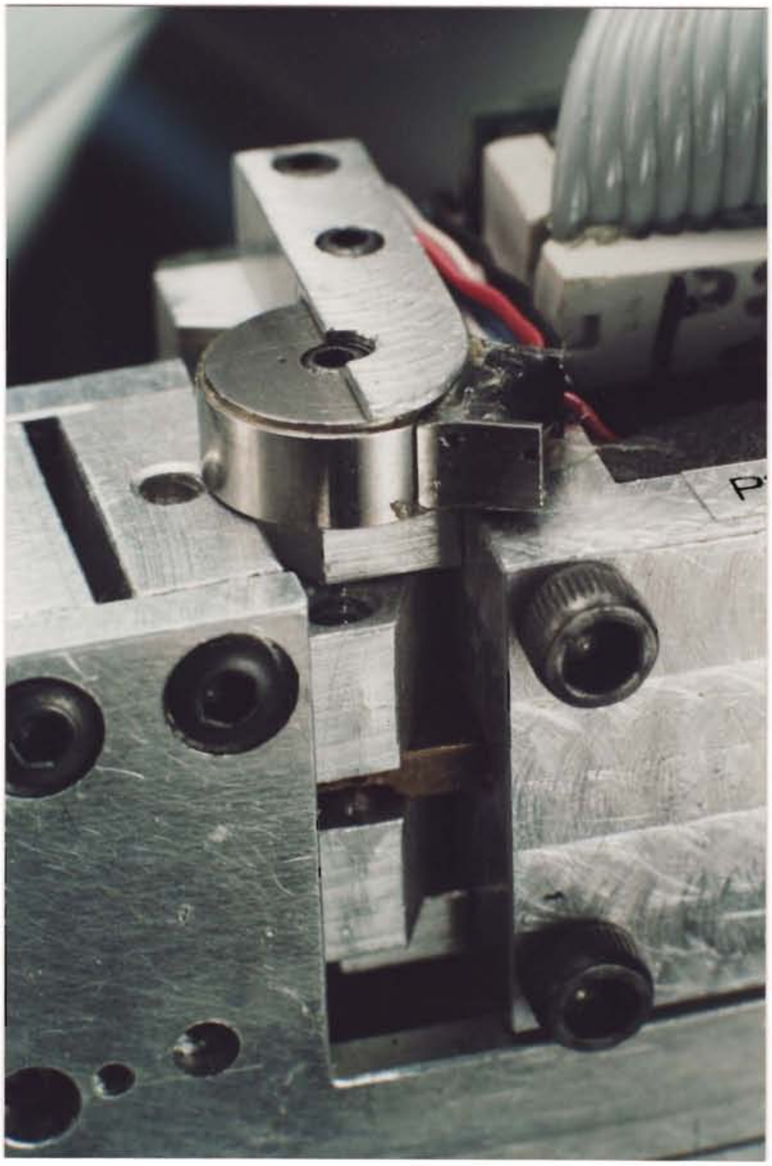

FIGURE 2: Phase-II optical angle encoder mounted atop the main knuckle joint of the finger controller, and used to measure lateral finger position. (Photo. GC110595A-26)

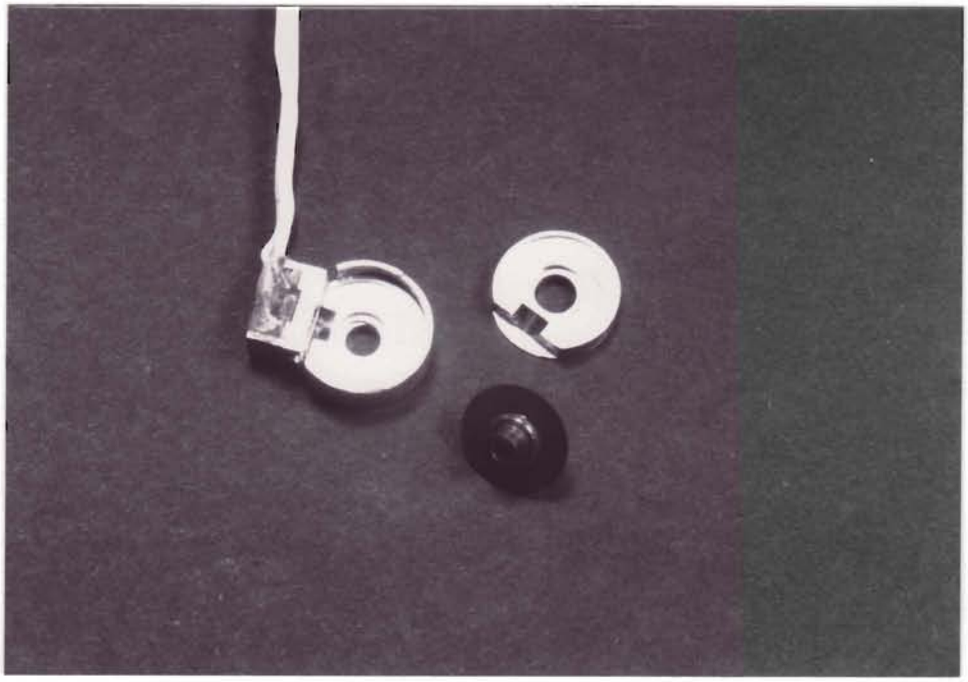

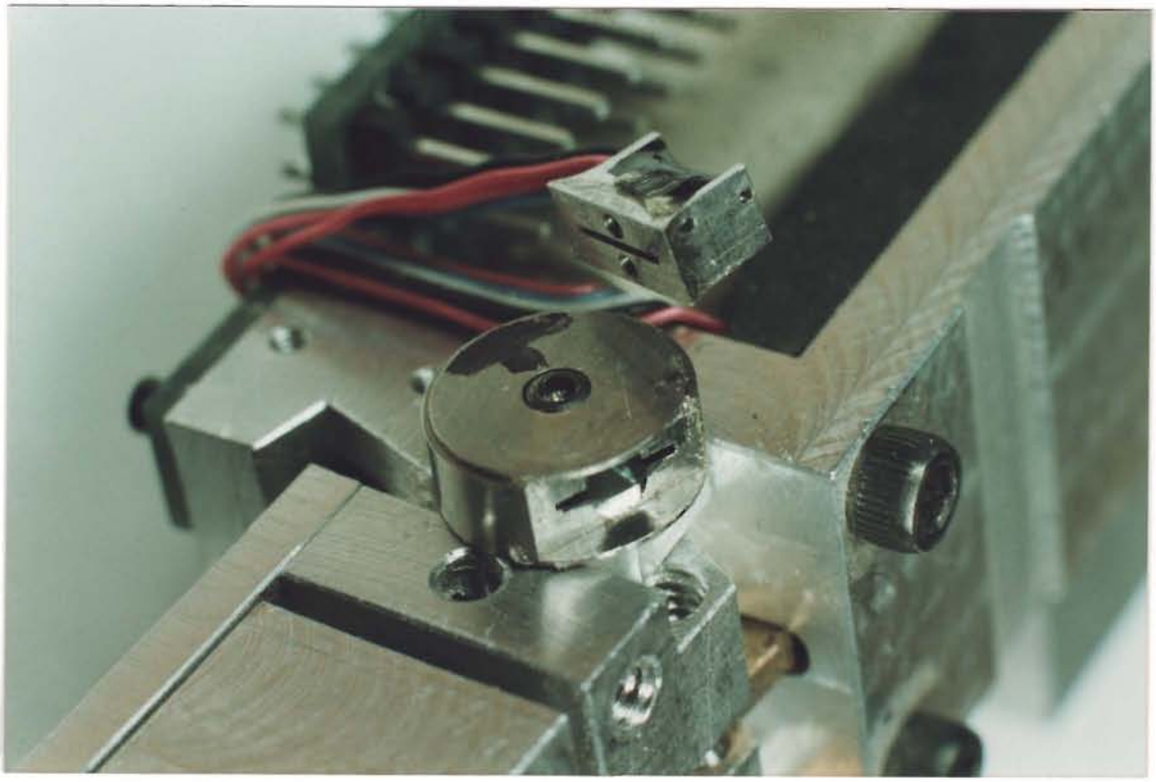

FIGURE 3: Top: disassembled optical angle encoder showing the filter wheel (center), two body halves, and sensor module (left) (Photo. GC160891-22.) Bottom: Sensor undergoing repair illustrating the filter wheel, filter wheel slot, and emitter/detector holes in sensor mount (Photo. GC080595A-06).

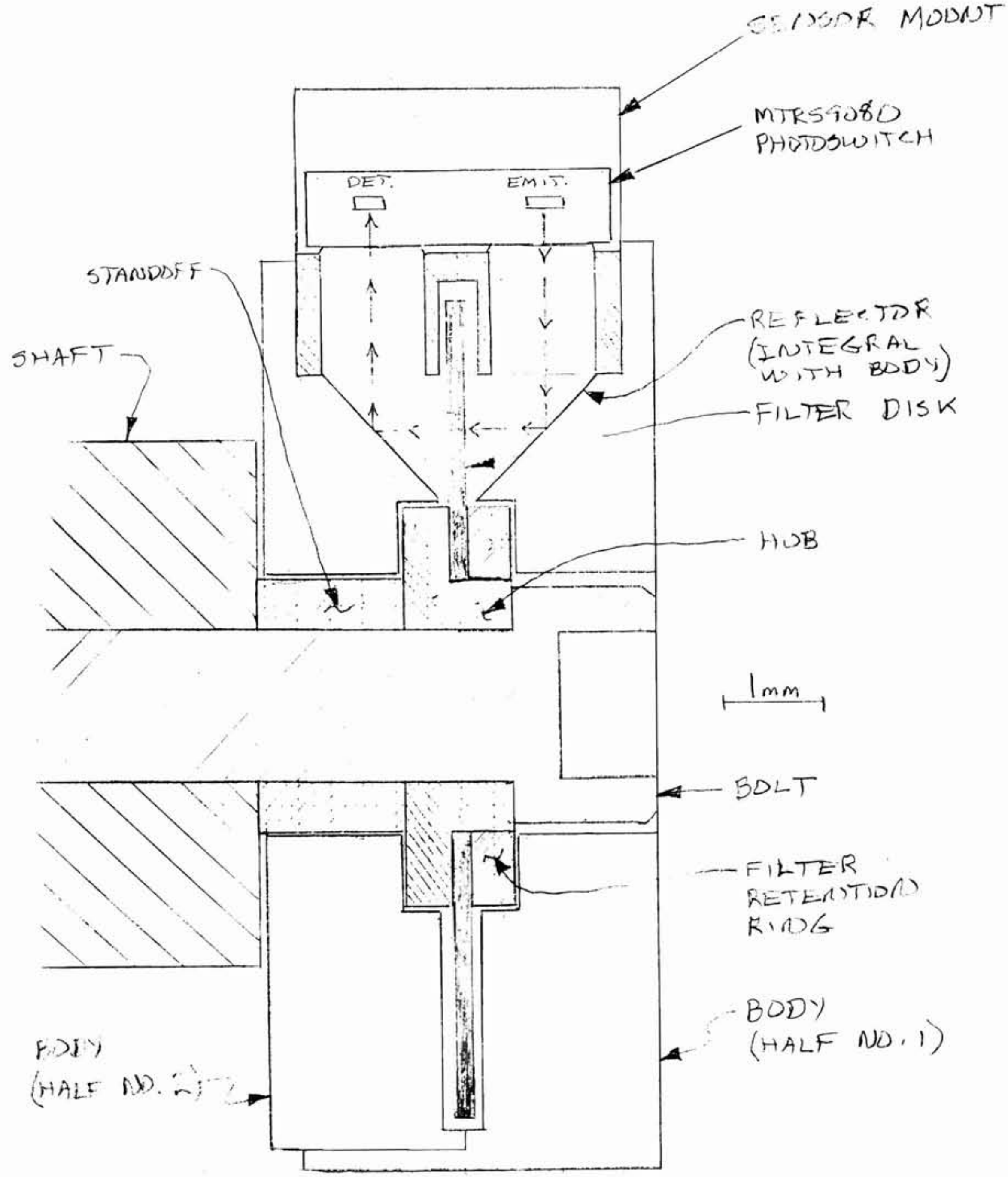

FIGURE 4: Cross-section of optical angle sensor illustrating the folded optical path from the emitter, reflection through the filter wheel, and reflection back to the detector. (Dwg. GC230791-01)

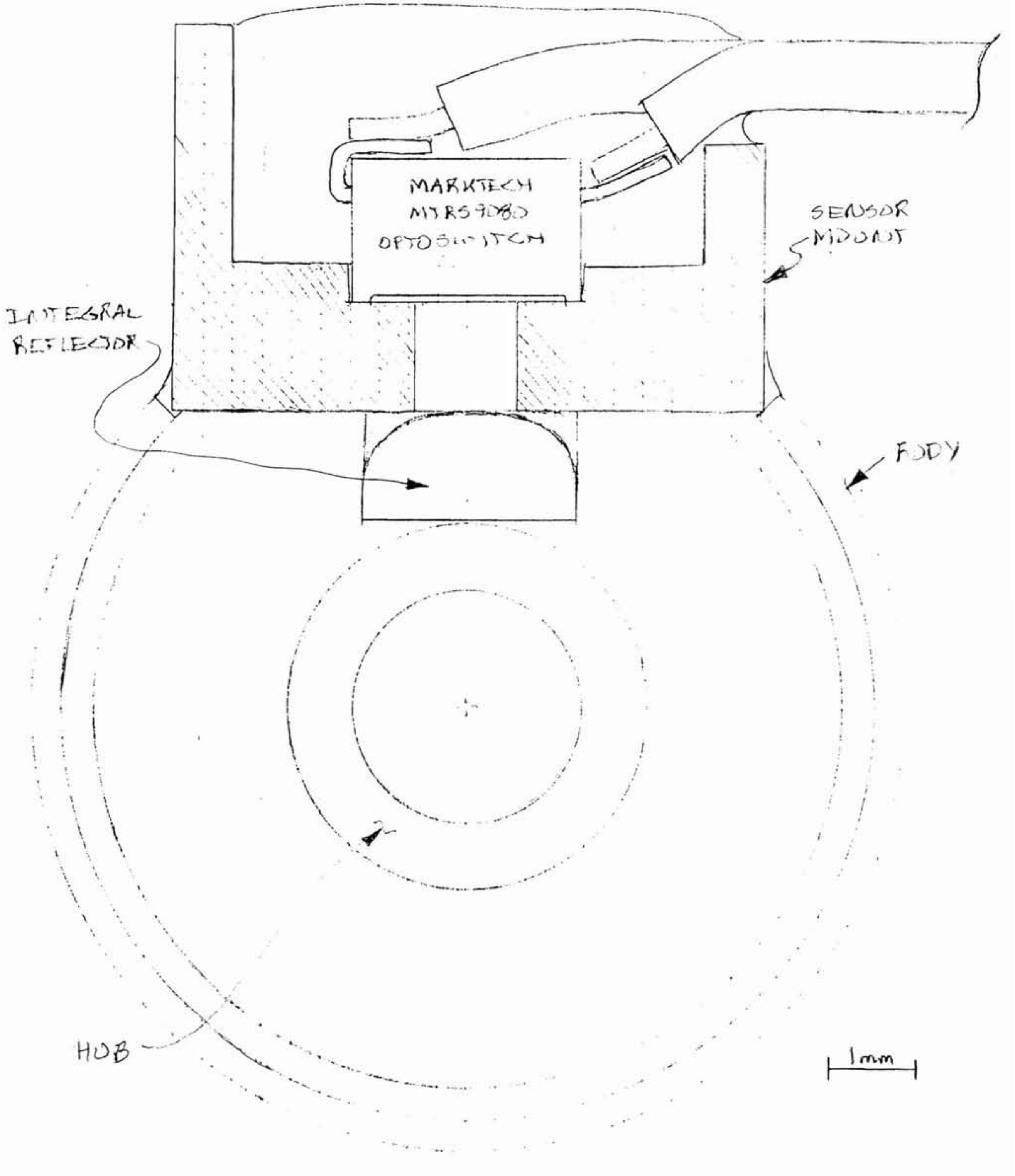

FIGURE 5: Frontal view of optical angle sensor. (Dwg. GC230791-02)

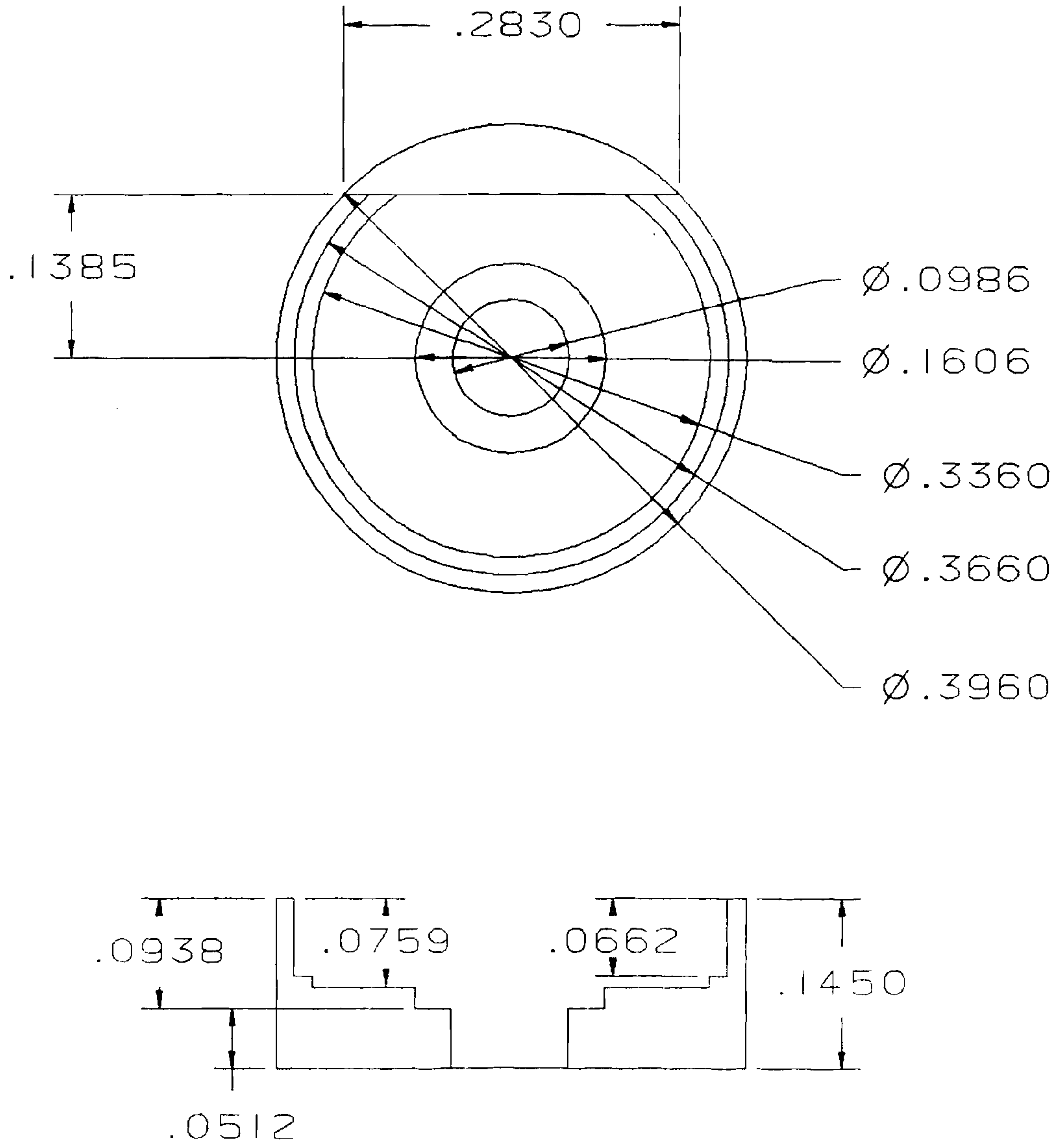

FIGURE 6: Shop drawing of body half no. 1 for the optical angle sensor. (Dwg. GC091291-01 by JAS using ANVIL, all dimensions in inches.)

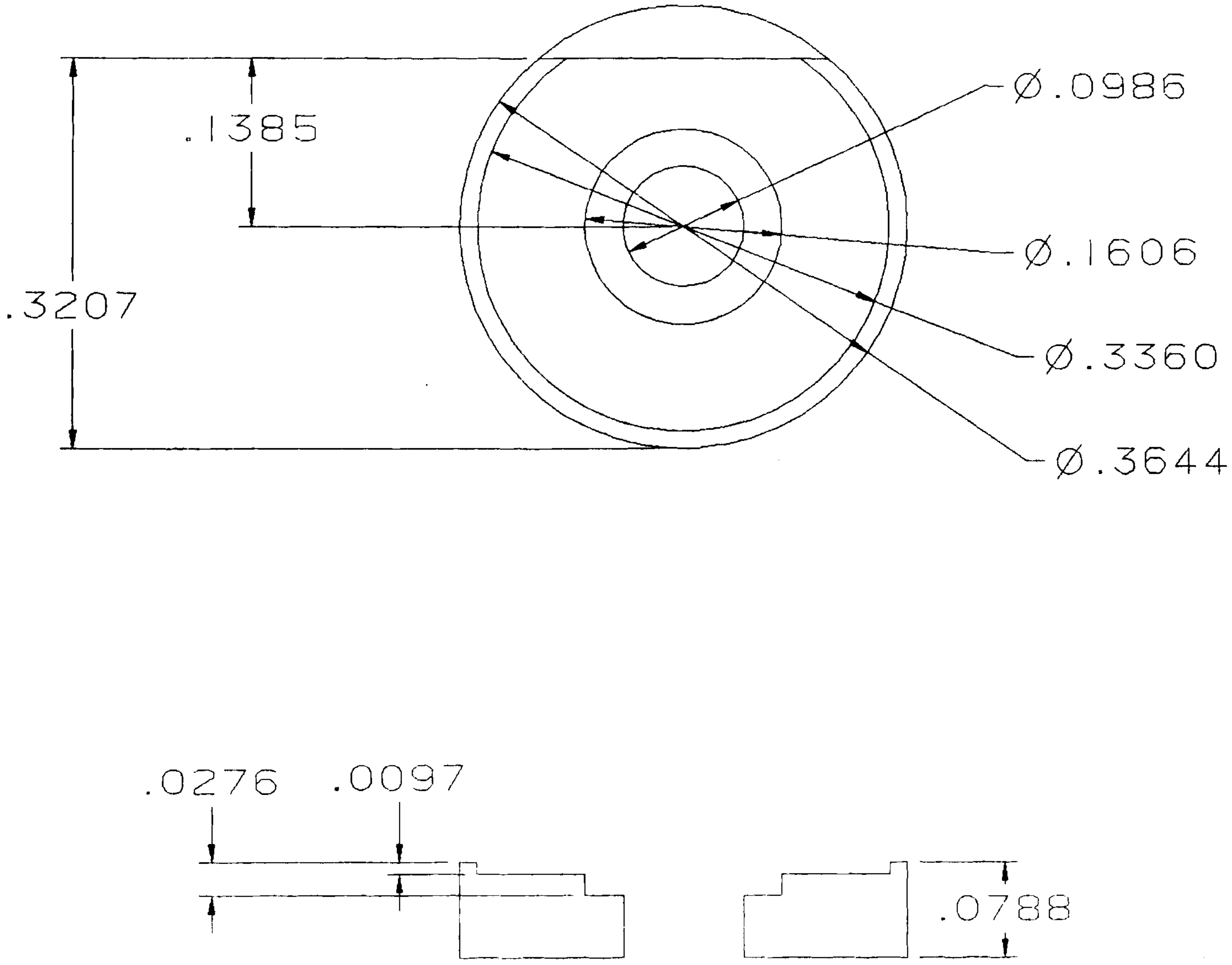

FIGURE 7: Shop drawing of body half no. 2 for the optical angle sensor. (Dwg. GC091291-01 by JAS using ANVIL, all dimensions in inches.)

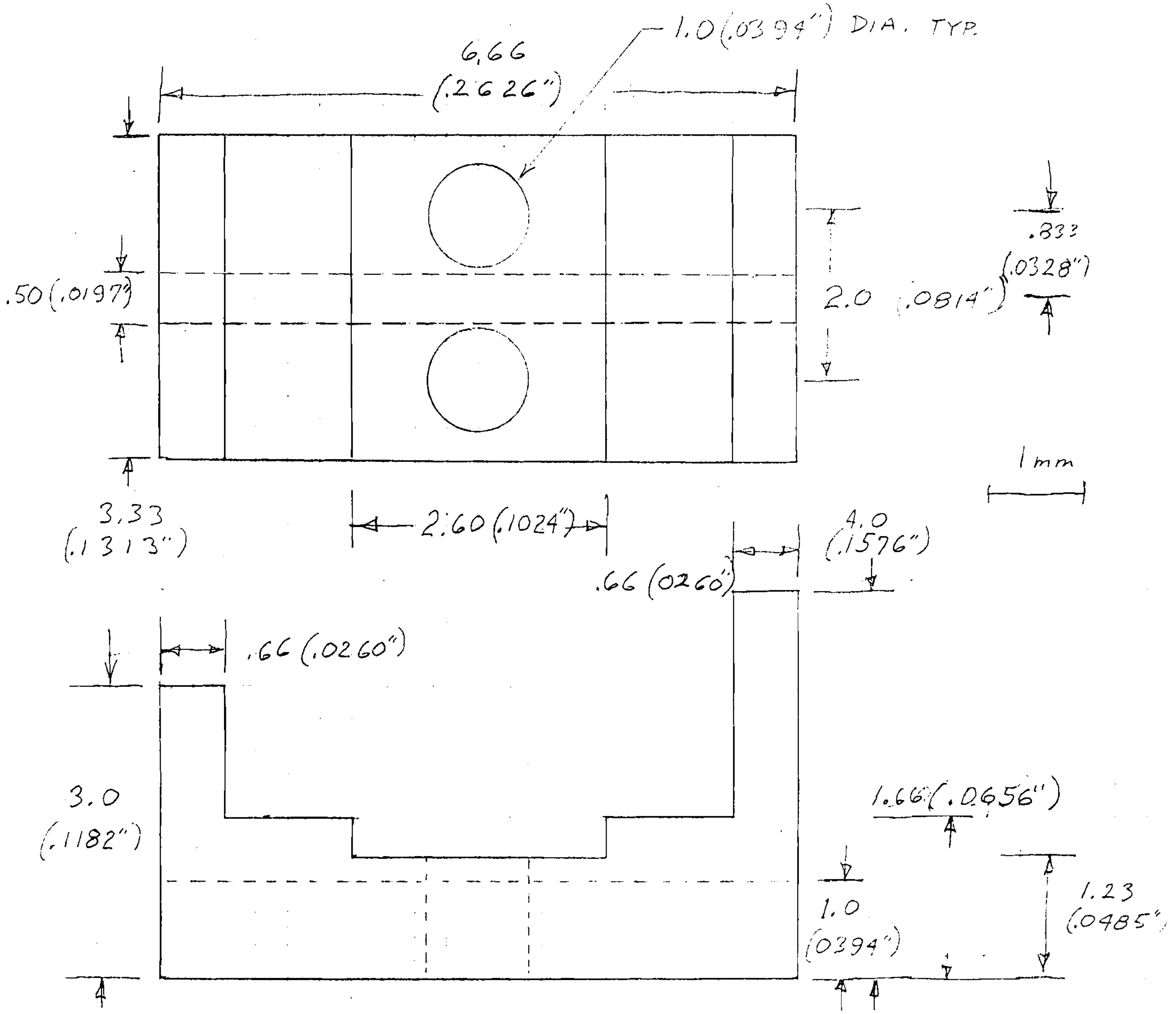

FIGURE 8: Optoswitch mount for angle encoder. (Dwg. GC230791-01)

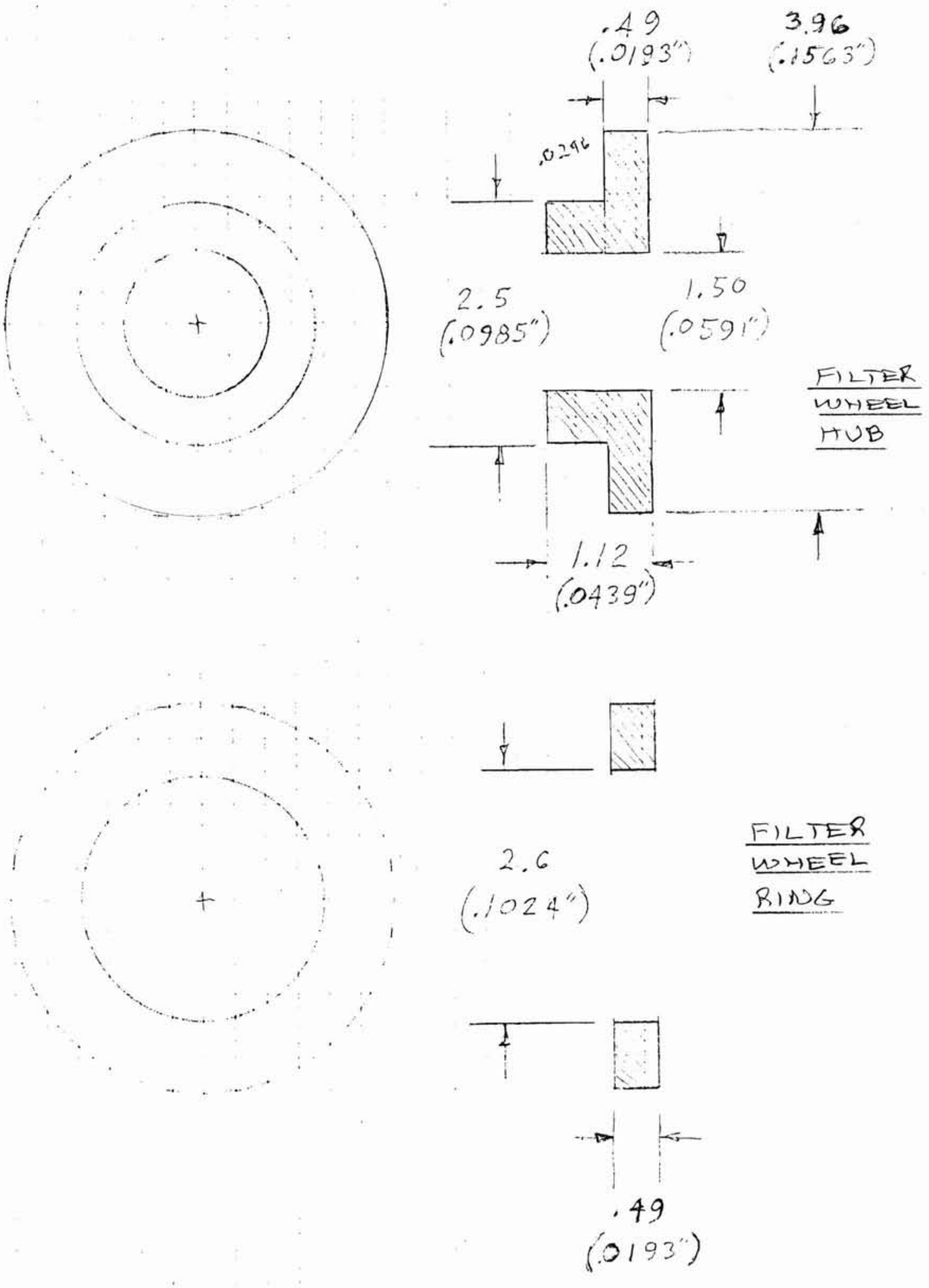

FIGURE 9: Filter wheel hub and retention ring within the optical angle encoder. (Dwg. GC250791-01)

A representative unconditioned output signal from the angle sensor is shown in Figure 10, and is seen to be monotonic but non-linear over the range of 0-300°. Of particular note was the relatively low output (1.5V) with respect to the Phase-I version (3-4V), and was presumed to be caused by additional light losses over the significantly longer light path. No effort was expended on this program to develop the sensor beyond this point, but directions for future development of the optical angle sensor are presented in Section 6.

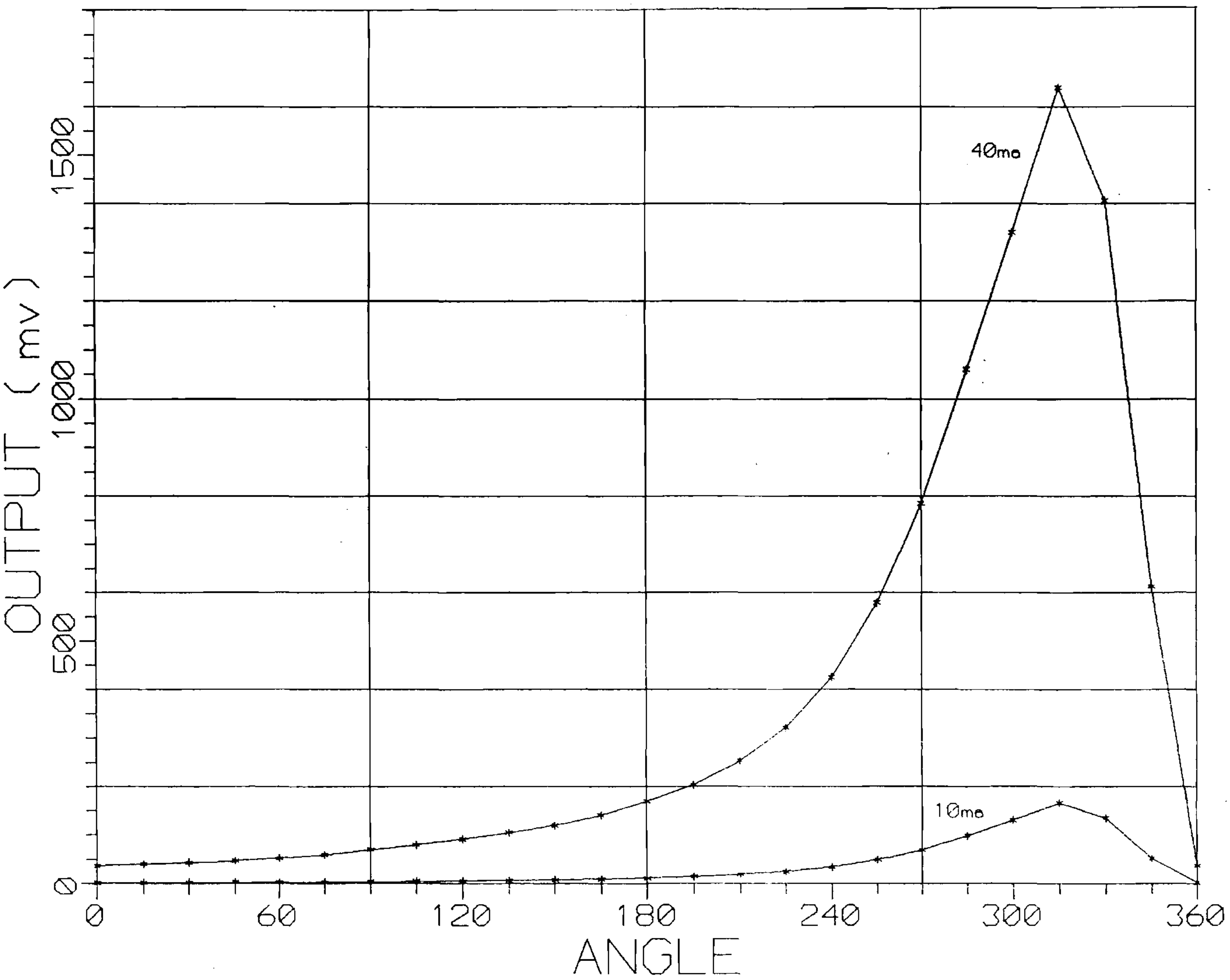

FIGURE 10: Representative unconditioned output signal from the Phase-II optical angle sensor at several LED emitter drive currents is observed to be monotonic but non-linear over the range 0-300°. (Graph 300991.G1)

2.2 Force Sensor

In addition to advancing the development of the optical angle encoder described, another objective of the Phase-II work was to pursue further refinements of the optical joint-torque sensor. As illustrated in Figures 2.6-1, -2, and -3 of the Phase-I Final Report, the torque at a virtual joint was measured by a cantilever attached to the main joint slider. In order to avoid some of the well-known problems with strain gage instrumentation (e.g., low signal level and attendant high noise susceptibility), the Marktech MTRS-9080 optical switch was again utilized, but in the displacement sensing mode so as to measure the relative movement of the cantilever relative to the main joint slider. This approach resulted in a very sensitive bend sensor (1um resolution) with a raw signal output of volts, rather than millivolt levels from strain gages. A further advantage was obtained in that the identical signal conditioning electronics could be used for all sensing needs regarding the glove controller (e.g., angle and torque), thereby reducing development and fabrication costs significantly.

In evaluating the Phase-I torque sensor design, several shortcomings were noted. The first problem related to the problem of sensor drift during use, and was determined to be caused by the photographic paper target gradually breaking free of the underlying substrate. This was presumably caused by flexure of the cantilever, and was addressed by studying various targets, e.g., white photographic paper (standard), anodized aluminum, milled aluminum, and sanded aluminum surfaces. The most stable results were achieved by filing a milled aluminum surface, then unidirectionally sanding with 220 grit paper.

Another difficulty was encountered pertained to the maintenance of sensor calibration during assembly/disassembly operations. The opto-displacement sensor was mounted on the main slider and the reflector located on the cantilever, so any slight movement or slippage at the screw fastener holding the cantilever to the slider would result in a significant change the sensor output. Similarly, calibration established prior to a disassembly/assembly operation could not be maintained as the cantilever base did not seat into the slider base the same way each time. This behavior was partially addressed in Phase-I by mounting the sensor on a miniature bridge whose elevation could be adjusted with a fine screw to bring the sensor back into calibration. The situation, however, was still inconvenient and not suited for long-term stable use.

This problem was more fully addressed in Phase-II by designing a cantilever structure that included both the torque sensor and reflector target, as illustrated in Figure 11 and 12. The sensor is shown mounted on a support beam, which in turn is attached to the base that was screwed to the main slider. In this manner, the cantilever could be calibrated once at the time of manufacture and then attached to the main slider without need of further adjustment. A typical response curve is shown in Figure 13.

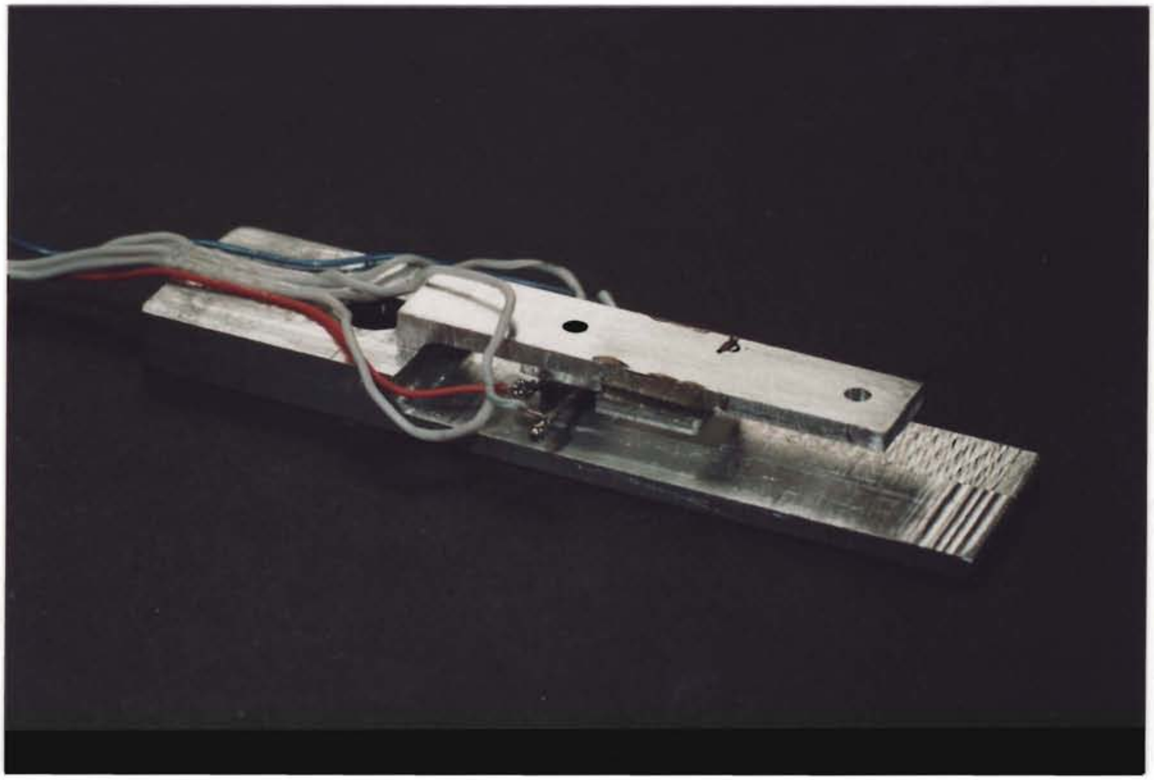

FIGURE 11: Modular torque-sensing cantilever developed during Phase-II. Both the displacement-sensing optoswitch and the reflector target were incorporated into a single structural element in such a manner that bolt-down forces did not affect the calibration of the torque-sensing cantilever. (Photo. GC160595A-01)

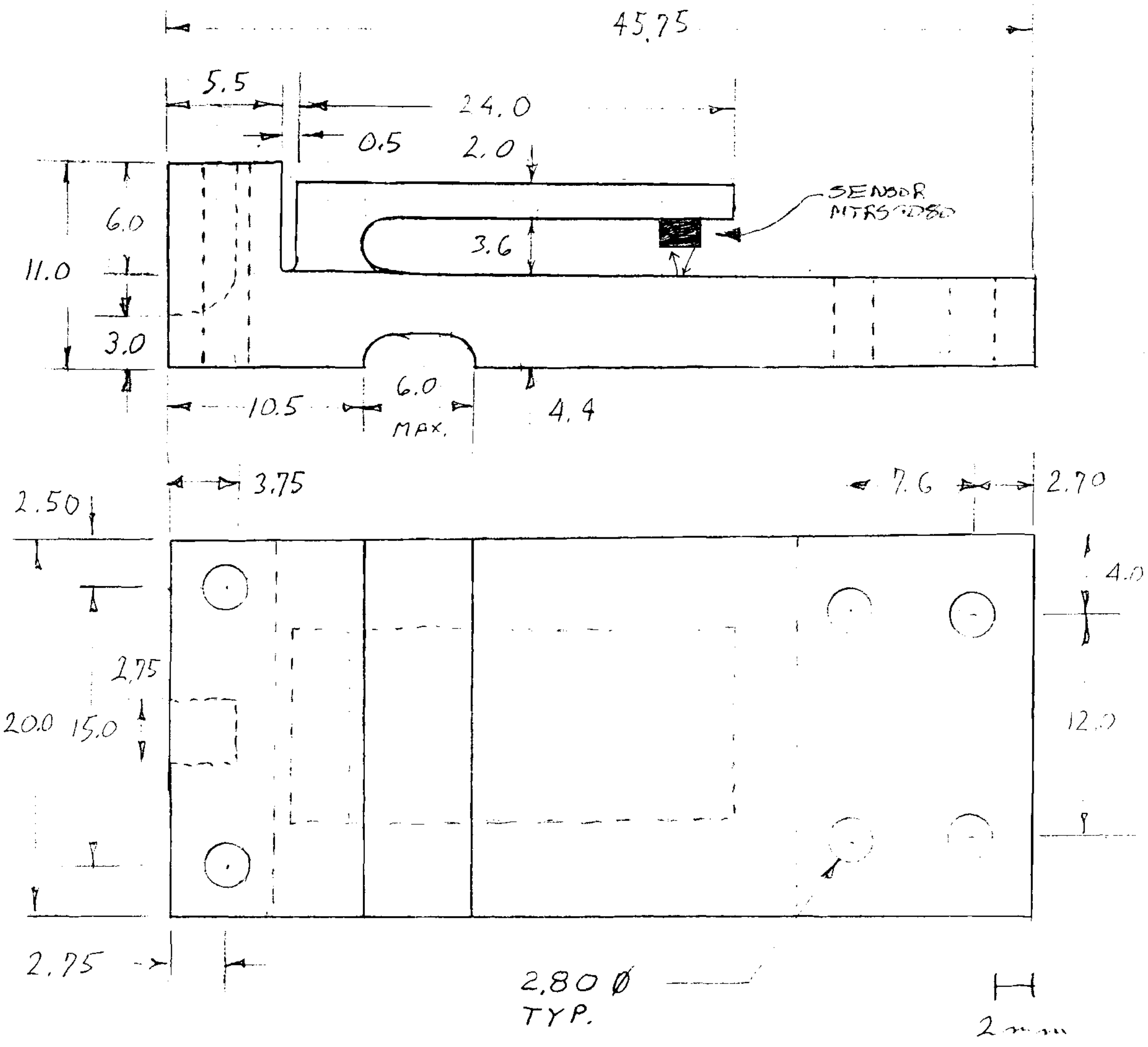

FIGURE 12: Dimensions of the torque-sensing module developed for joint number 3 of the master controller finger. (Dwg. GC251191-01)

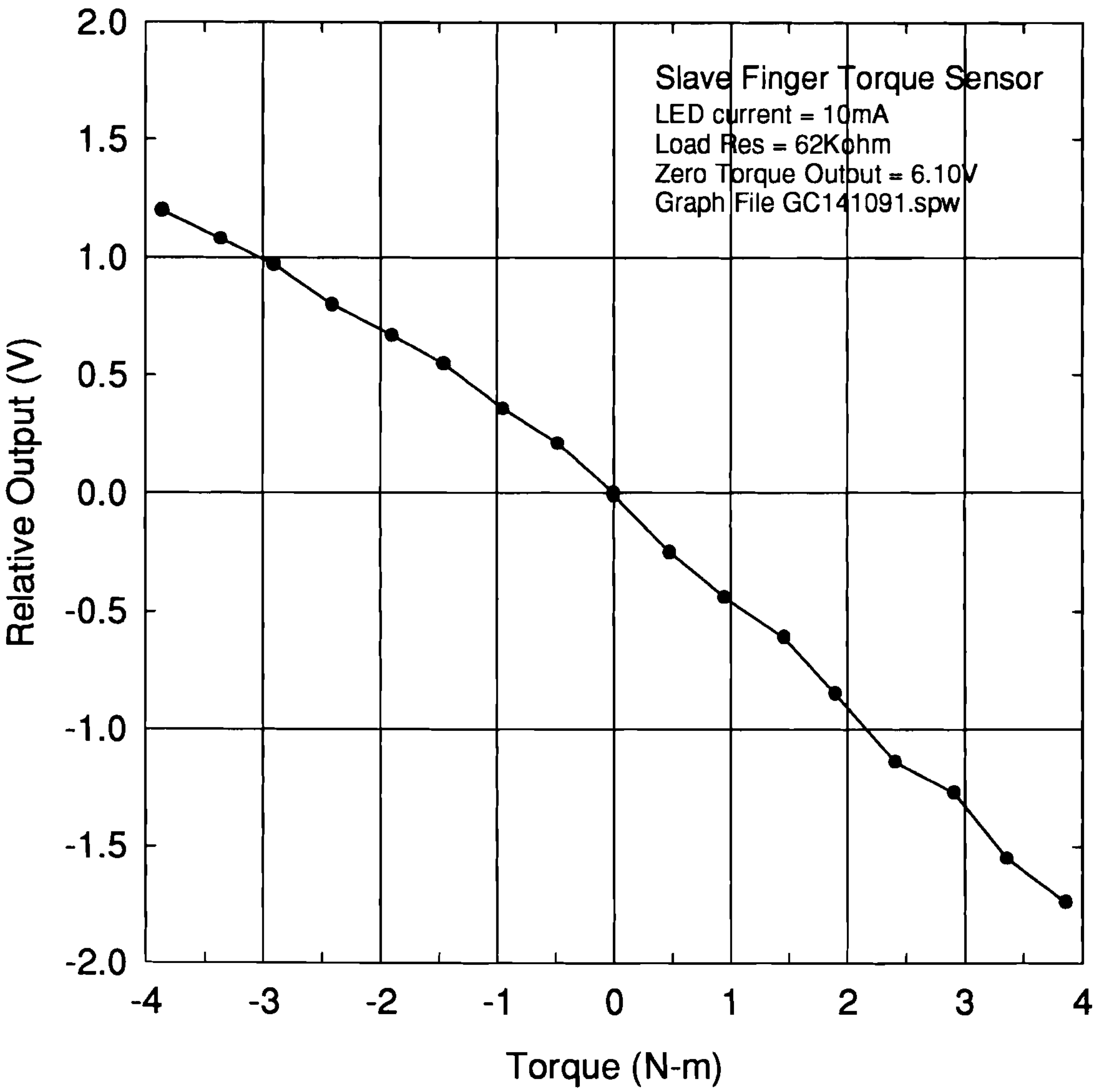

FIGURE 13: A typical response curve for a Phase-II torque sensor is approximately linear. (Graph GC141091.SPW)

The last problem regarding the Phase-I torque sensor was not uncovered until late in the Phase-II program. The sensor was found to be inaccurate and only measured torque on virtual joint when the applied force vector was normal to the cantilever. In other cases it was not possible to accurately infer torque from applied forces, and in some situations gave completely erroneous results, e.g., a force vector applied at the tip of the cantilever and directed through the axis of the virtual joint resulted in a non-zero sensor output, rather than zero.

This problem was not overcome in this Phase-II study. Various approaches to address this problem are described in a later section concerning the design of a Phase-II glove controller mechanism, and involve measurement of the torque at the virtual joint by directly instrumenting the slider drive gear with an optical displacement sensor, or by reliance on the measurement of biaxial strain (utilizing strain gages) in a cantilever.

2.3 Signal Conditioning Boards

Use of a common transduction element (i.e., Marktech MTRS-9080 optoswitch) for the joint angle and torque sensors enabled the design and use of a single signal conditioning circuit such as that shown in Figure 2.5.3 of the Phase-I final report. This original circuit only provided for gain (span) and zero offset adjustments, and one objective of Task 1 was to refine the circuit and add sensor and board temperature compensation. If performance of the circuit proved satisfactory, the final step was to fabricate the circuit using PCB technology.

Photographs of the sensor signal conditioner boards developed during Phase-II are shown in Figure 14, and detailed block diagrams, circuit and layout drawings presented in Appendix A. Temperature compensation of both the sensor and signal conditioning boards was considered an important problem, as the variation in signal output due to temperature was measured to be approximately 0.5 to 1.0%FS/°C (i.e., a 10°C temperature change would modify the output by 5-10% FS). The Phase-II design reduced the variation in output to less than 0.2%FS over a 25°C temperature change at the sensor, as illustrated in Figure 15.

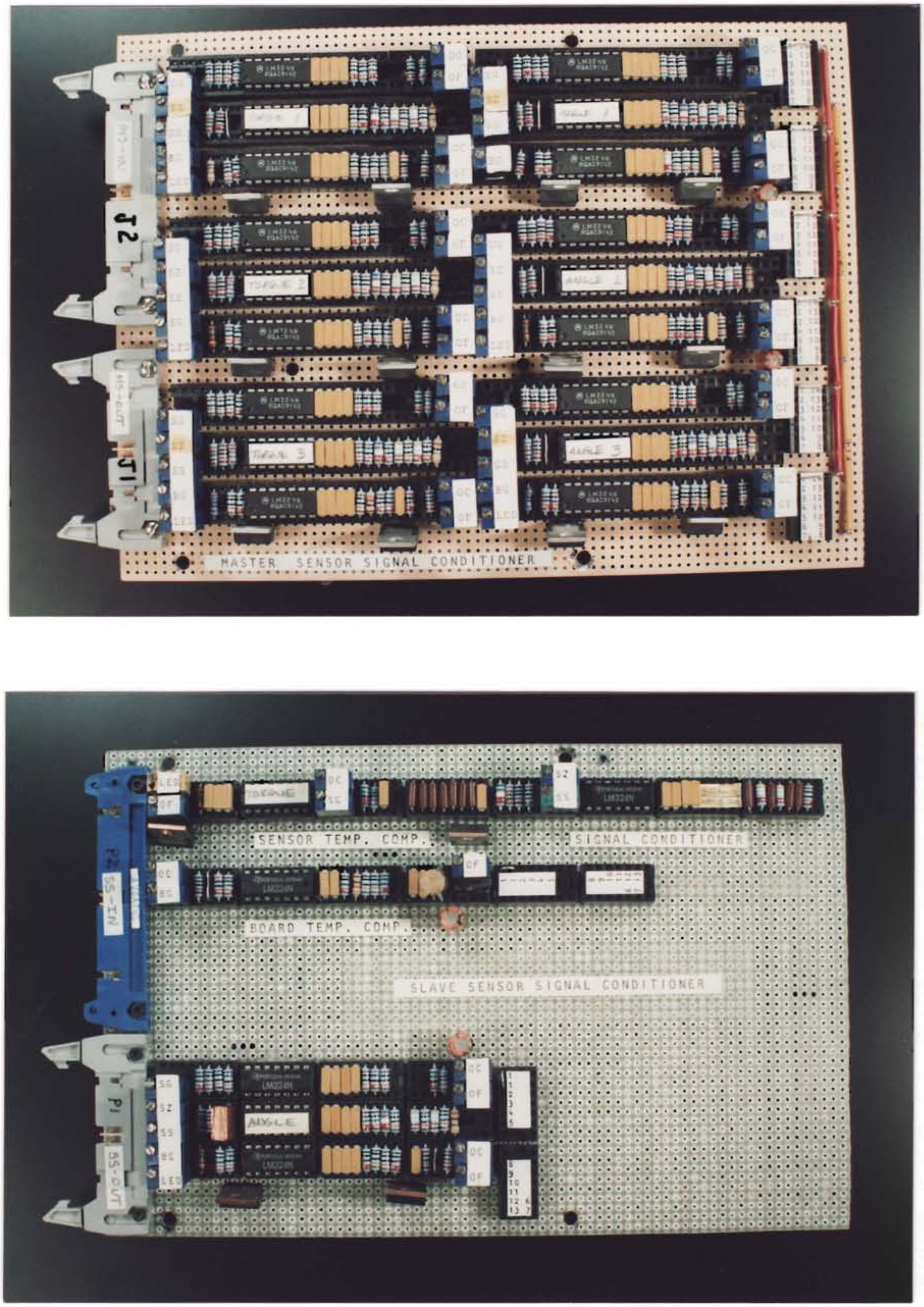

FIGURE 14: Sensor signal conditioning boards for master (top) and slave (bottom) fingers. (Photos: GC080595A-16 and -14)

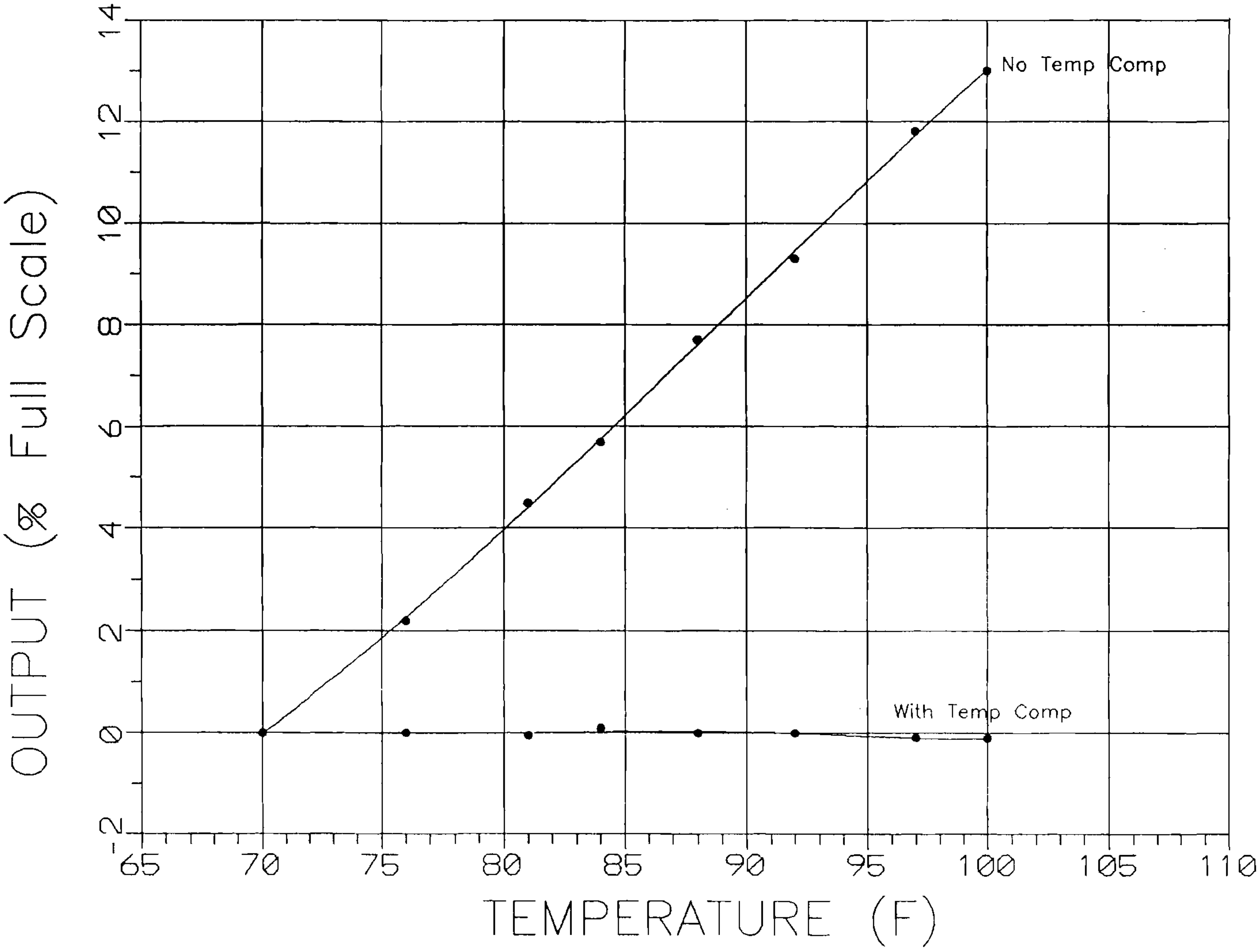

<u>FIGURE 15</u>: The Phase-II design of the signal conditioner boards included temperature compensation circuitry which reduced the variation in output to less than 0.2%FS over a 25°C temperature change at the sensor.

The initial approach to sensor temperature compensation was to utilize a thermistor to generate an appropriate offset voltage for both the sensor and the signal conditioning board. This was found to be feasible only for the board but not for the sensor, as no thermistor was found with a response curve that adequately matched that of the sensor. Further investigation revealed that essentially all sensor temperature sensitivity resided in the LED emitter, and the approach eventually selected was to simply drive the LED at a constant current and use the LED voltage drop (inverted and appropriately scaled) as a compensation signal. This approach was successful in reducing signal variation to less than 1%FS over the expected range of sensor operation (15-30°C). However, two additional wires were required to monitor the LED voltage drop, which increased the number of sensor leads from 4 to 6.

Despite the addition of various improvements in terms of board size reduction and temperature compensation over the Phase I signal conditioning boards, several significant problems remained or were uncovered during evaluation of the Phase-II boards:

- Sensor drift was significant during board warm-up (e.g., first 5-10 minutes). This was problem was not addressed in hardware, and prevented achievement of stable or predictable system recovery from a power-loss event.

- Significant time and effort was required to calibrate the signal conditioning boards (typically several days) due to the need for placing the sensor and the board individually in a oven for temperature ramping during calibration. (See Appendix B for full listing of calibration procedure.)

It was concluded that, in general, the Phase-II signal conditioning boards were not satisfactory from a practical-use standpoint, and that other approaches to signal conditioning should be pursued, e.g., utilizing an A/D card and performing all capture, conditioning, calibration, and processing (including linearization) with a microprocessor. For this reason, PCB-versions of the signal conditioning boards to replace the wirewrapped versions were not created on this Phase-II program.

2.4 Motor Driver Boards

The motors on the Phase-I controller finger could be driven in two modes, analog power (±12VDC) or bipolar PWM. Photographs and electrical schematics of the master and slave motor driver circuits are shown in Figures 16 to 18, respectively. Conversion from analog to PWM mode of motor drive is accomplished by moving the jumper on header J1 (Figure 15).

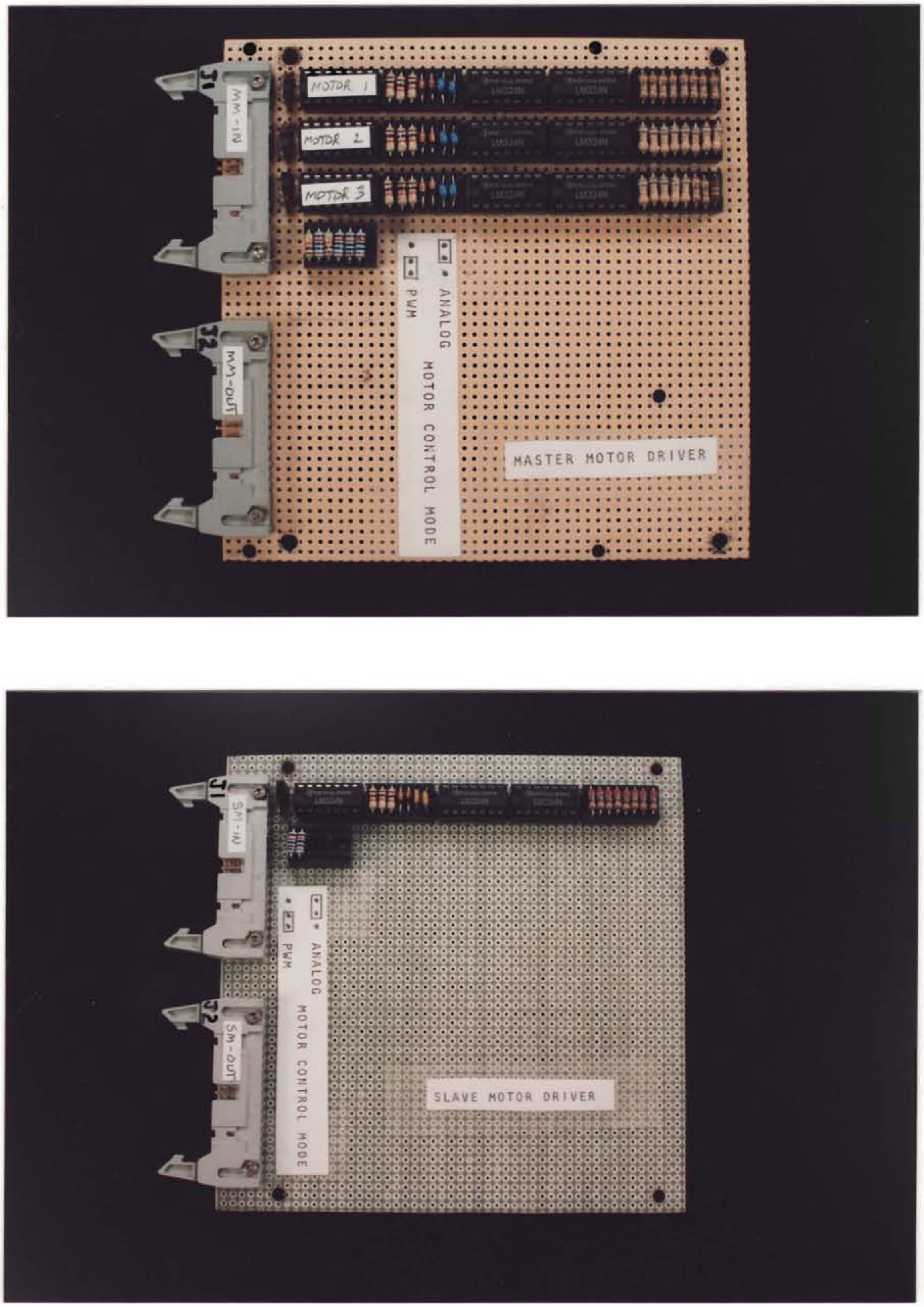

FIGURE 16: Phase-II driver boards for the master (top) and slave (bottom) motors. (Photos: GC080595A-12 and -11)

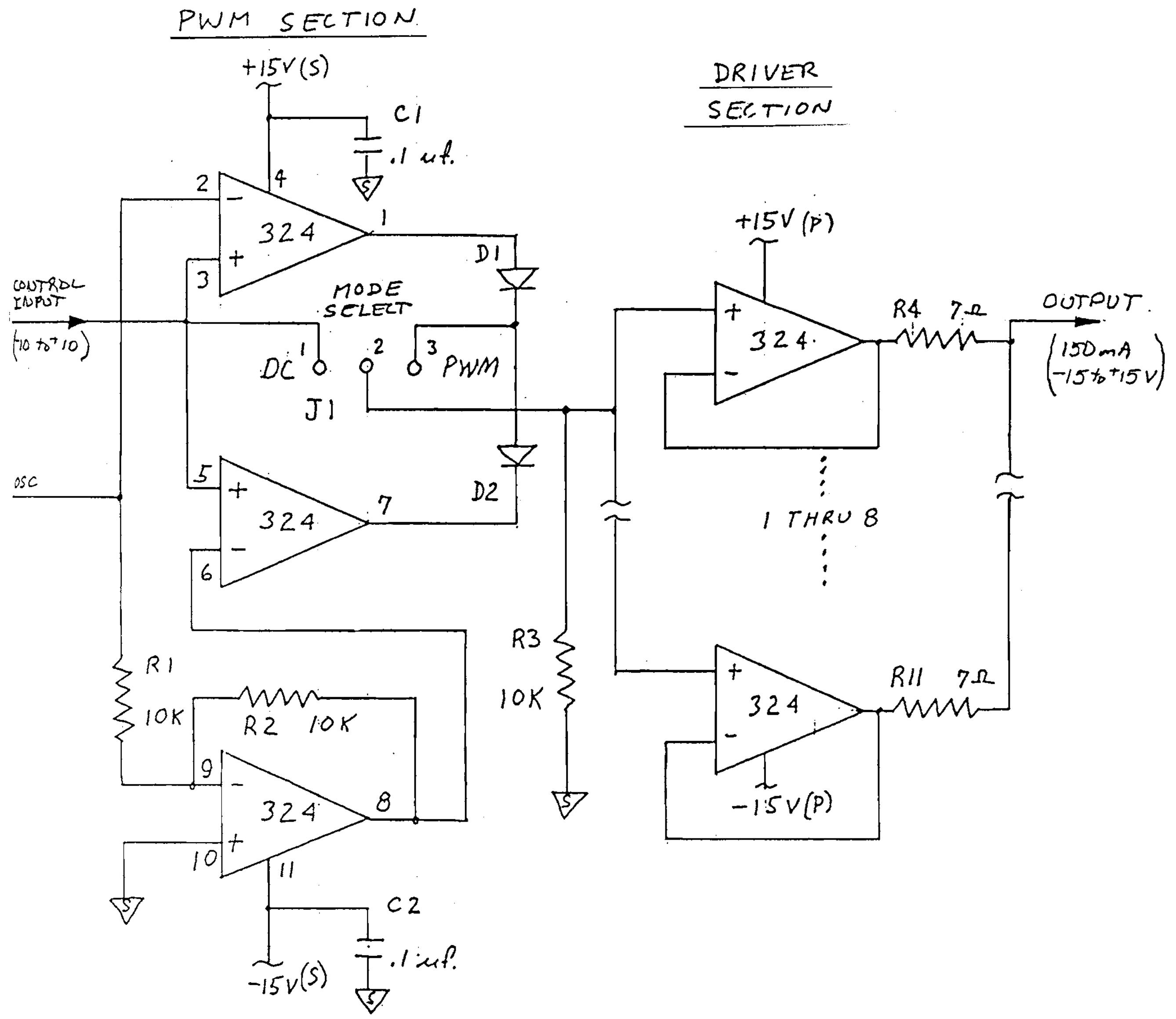

FIGURE 17: Bi-polar analog or PWM motor drive circuit for the master and slave motors. A jumper on J1 is used to select the driver mode.

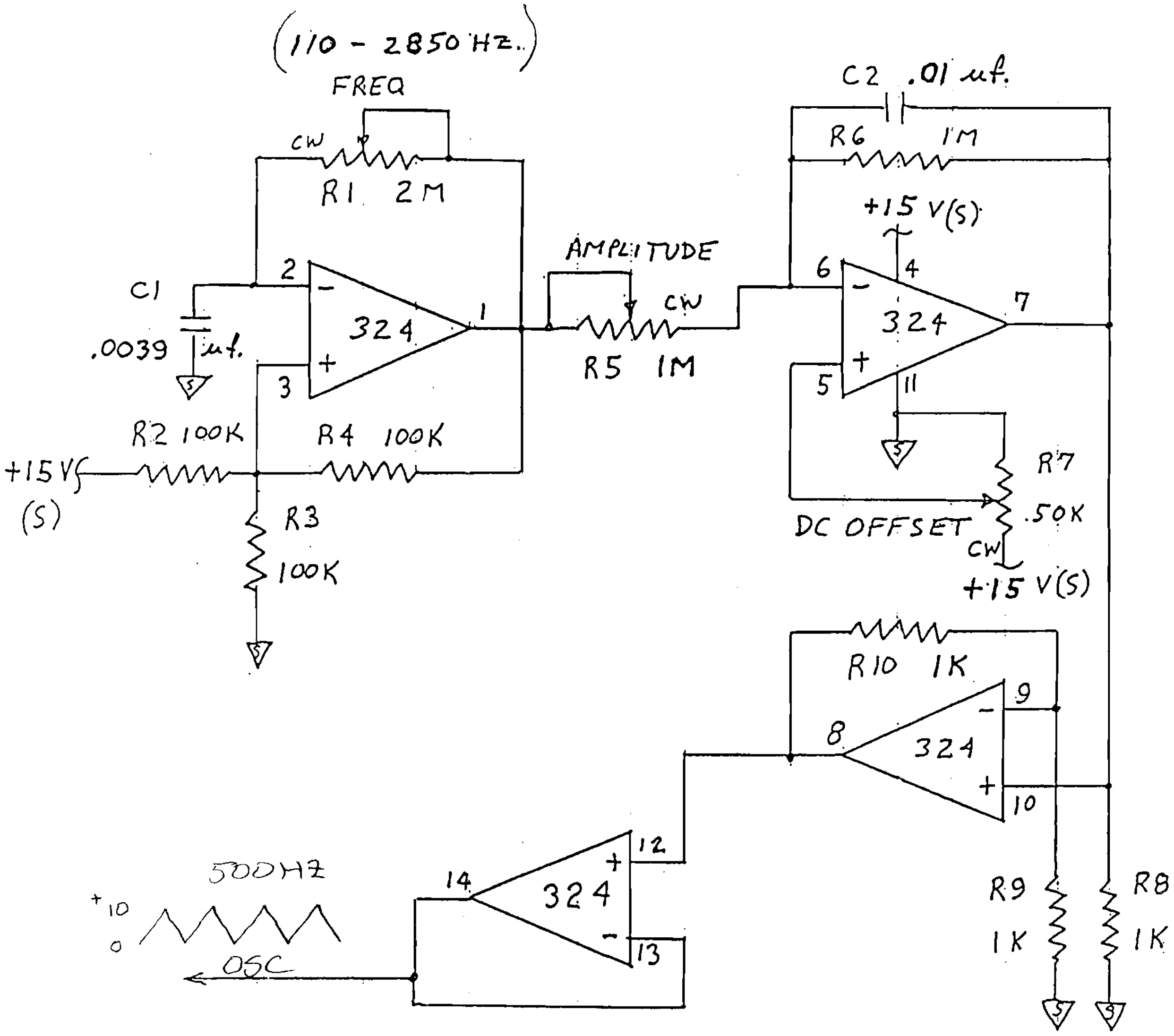

FIGURE 18: Oscillator circuit used to generate a triangle wave for the PWM mode of motor control.

2.5 M/S System Evaluation

A photograph and functional block diagram of the updated single-finger glove controller system is shown in Figures 19 and 20. The original Phase-I Master/Slave Hand Interface enclosure was modified to include several potentiometers for manual control of all four motors (i.e., 3 on the master finger, and 1 on the slave joint), and the control and sensor signals explicitly isolated and labeled on the protoboard area. Photographs of these modifications are shown in Figure 21. Additionally, the sensor signal conditioning boards and motor control boards were mounted within a separate enclosure, as shown in Figure 22. The specific procedure for operating the master and slave finger is detailed in Appendix C.

The signal conditioning boards developed on this program did not address the issue of sensor linearization, and therefore it was not possible to directly implement any master/slave control algorithms on the prototyping area of the master/slave interface module. Instead, only two simple motor control modes were evaluated, these being direct control of each motor by a ±5VDC signal, and local feedback of the torque sensor signal to its corresponding motor to allow joint motion in response to forces applied to the fingers. The specific electrical connections to implement these modes of control are described in Appendix C, and were used to evaluate the behavior of the glove finger controller and slave joint.

During evaluation of the system under the local torque-sensor feedback mode, it was observed that significant torque sensor drift existed, and that periodic adjustments to the zero-point were required. This was especially noticeable when the system was first turned on, and 10-20 minutes were required to achieve a period of adequate stability lasting several minutes.

Little distinction was noticeable between the different motor drive modes. The PWM motor drive mode seemed to run a little smoother compared to the analog drive, and the joints seemed a little easier to unbind when inadvertently over-driven into their mechanical stops.

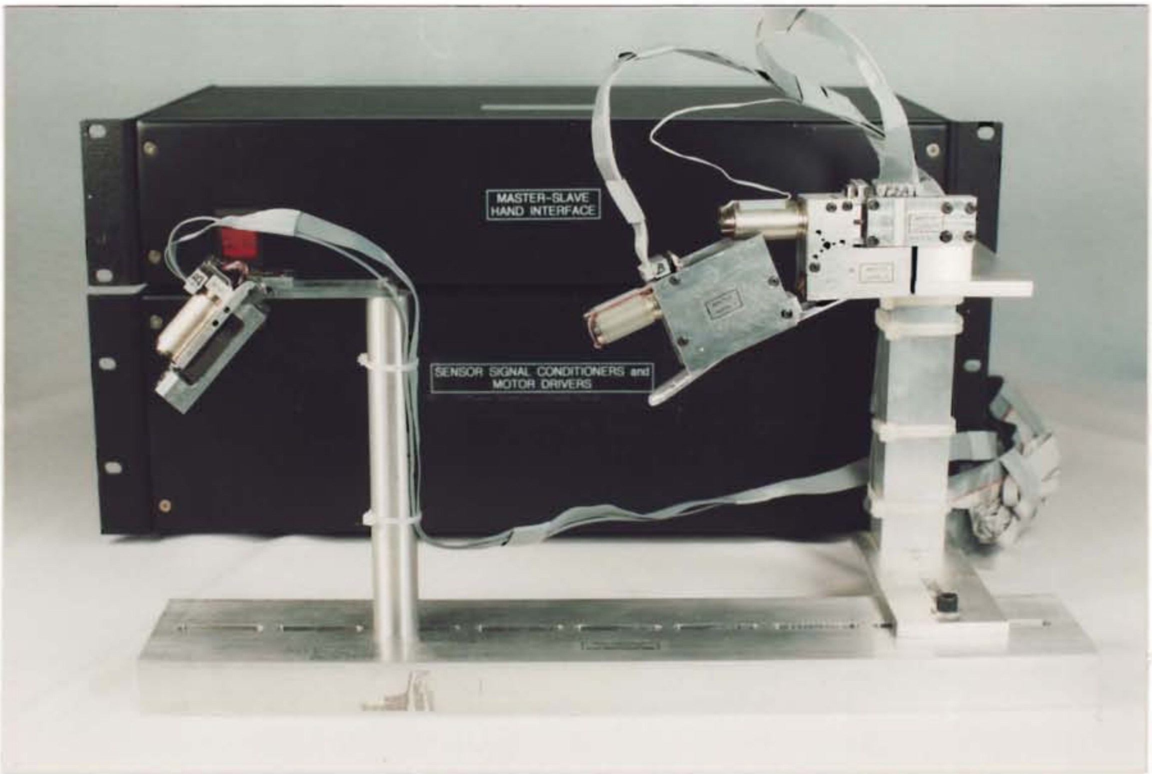

FIGURE 19: Updated Phase-II single-finger controller system showing master finger (right), single-jointed slave finger (left), master/slave hand interface (top), and sensor signal conditioning boards (bottom). (Photo. GC110595A-09)

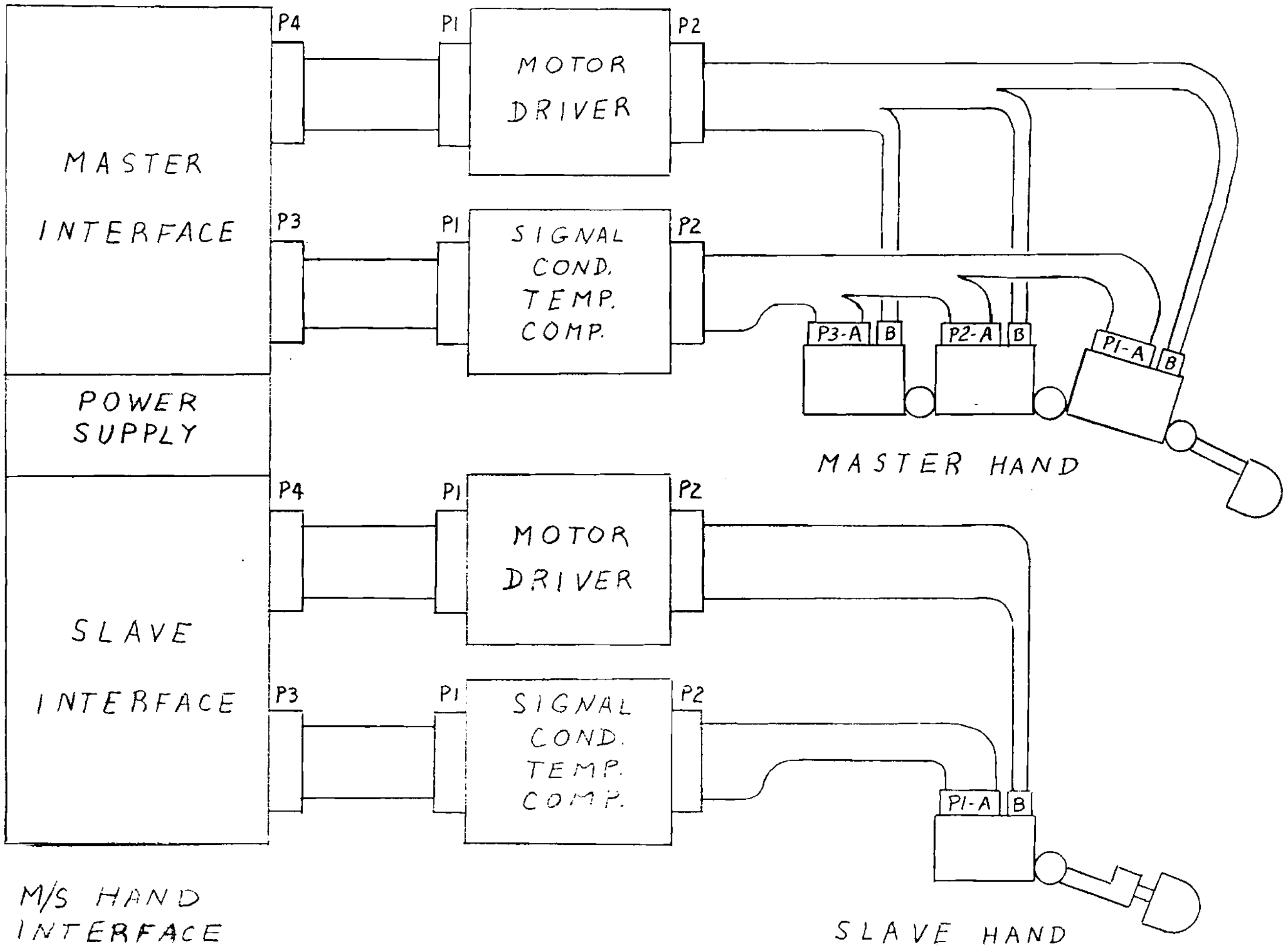

FIGURE 20: Block diagram of the overall Phase-II master/slave system.

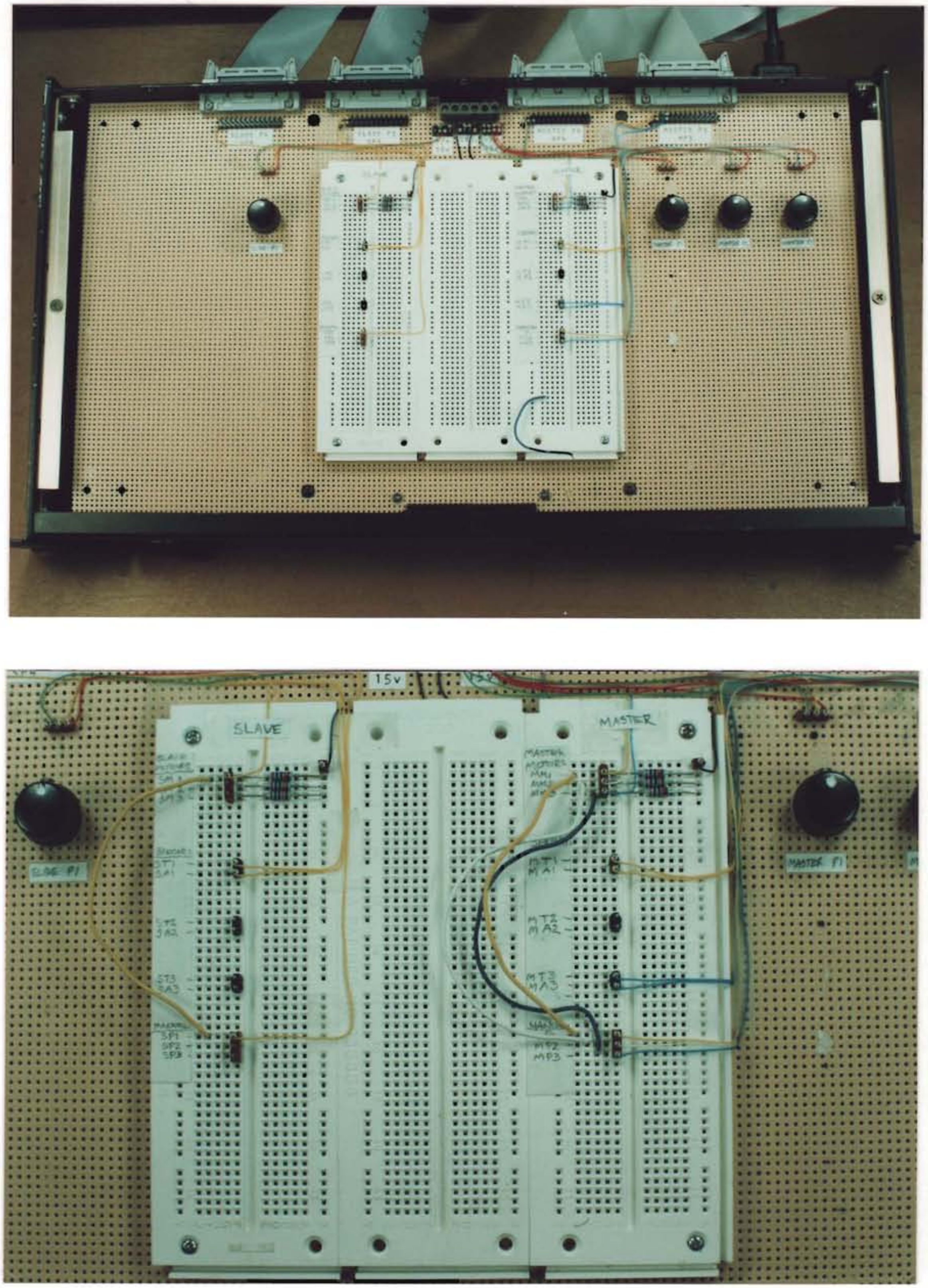

FIGURE 21: Modifications to the prototyping area of the master/slave interface include explicit identification of active motor control and sensor output leads, and the addition of potentiometers for manual motor control. (Photos. GC080595A-24 and -27)

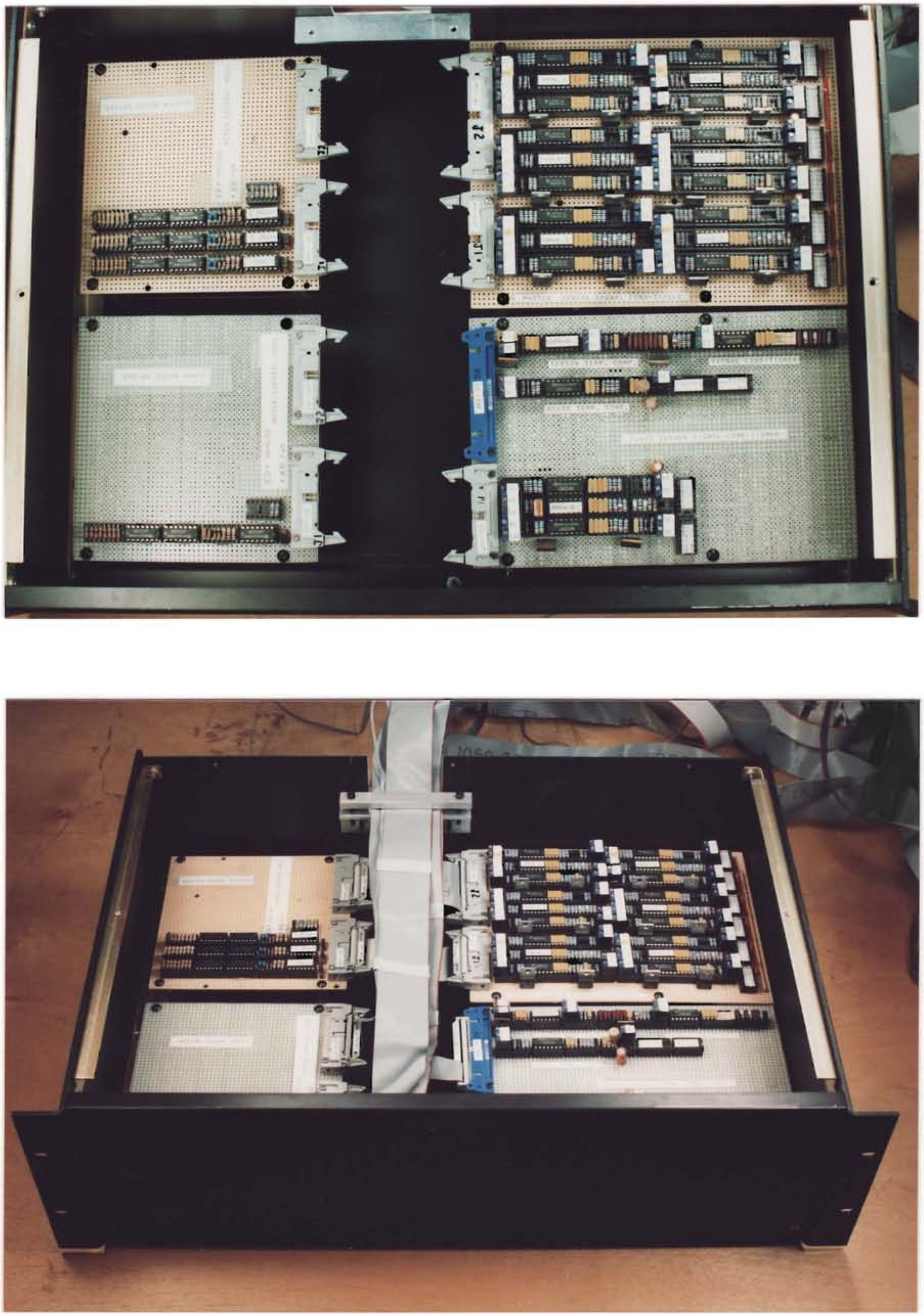

FIGURE 22: All signal conditioning and motor drive boards were mounted within a single enclosure. (Photos. GC080595A-18 and -22)

3. DESIGN of ADVANCED GLOVE CONTROLLER

The starting point in designing the Phase-II controller mechanism was the Phase-I finger prototype. As shown in Figure 23, the Phase-I controller utilized a virtual joint mechanism created through the use of a goniometer arrangement in which the slider was constrained to move in an arc about a virtual axis. The principal difficulties or incompletely-addressed design issues associated with the Phase-I design were:

1. Binding of the slider when subjected to lateral loads
2. Inaccurate joint torque sensor
3. Inappropriate mating of worm and spur gearing (via the idler gear)
4. Highly-loaded slider bearing support screws
5. Inadequate control of axial backlash in the worm drive shaft
6. Electrical and pneumatic cable routing was not addressed (cables were splayed over the top of the mechanism for convenience)
7. Electrical connectors were too large and were of the non-latching type.
8. Inadequate support may exist for the idler wormgear shaft.

The redesign process for the Phase-II glove controller began with the 2-DOF thumb joint, as it posed the greatest number of design challenges, e.g., limited space over the wrist available to accommodate joint mechanism, maximum number of electrical and pneumatic cables requiring routing, and highest density of mechanical elements required to implement the 2-DOF joint. The level to which an integrated design was advanced during the Phase-II effort is shown in Figures 24 to 27, and detailed CAD drawings of the individual components are presented in Appendix D.

In summary, the Phase-II effort did achieve a fully-workable design of a 2-DOF virtual thumb joint, and succeeded only in addressing Phase-I problems 1 and 2 listed above. The remainder of this section will describe the design effort in greater detail, and also indicate progress made to resolve the other problems.

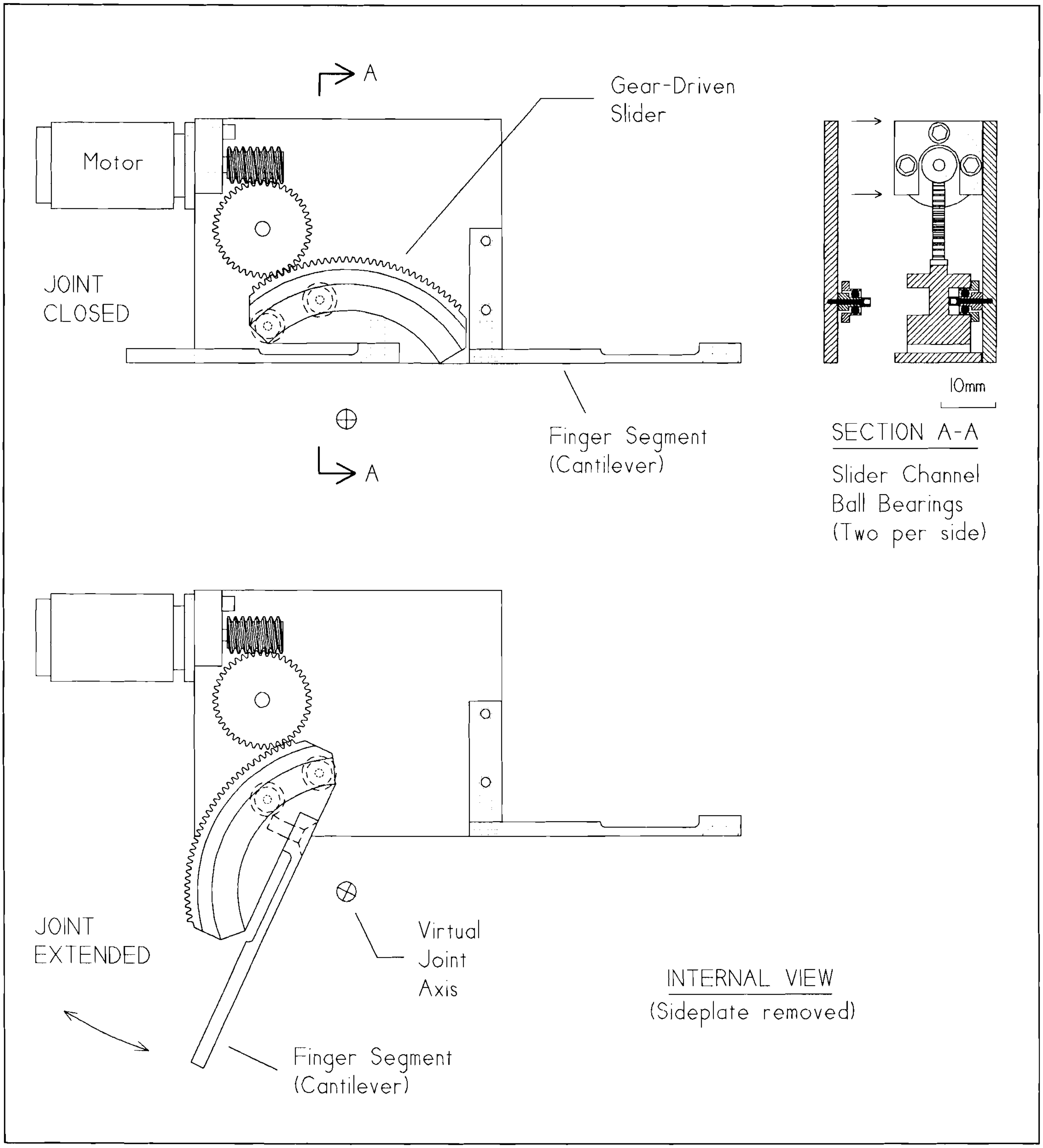

FIGURE 23: Internal arrangement of components within the virtual joint. Worm-driven slider moves in a goniometer-like fashion along ball-bearing supports about a virtual axis corresponding to the finger knuckle axis. (Dwg IR_VH_03.GCD)

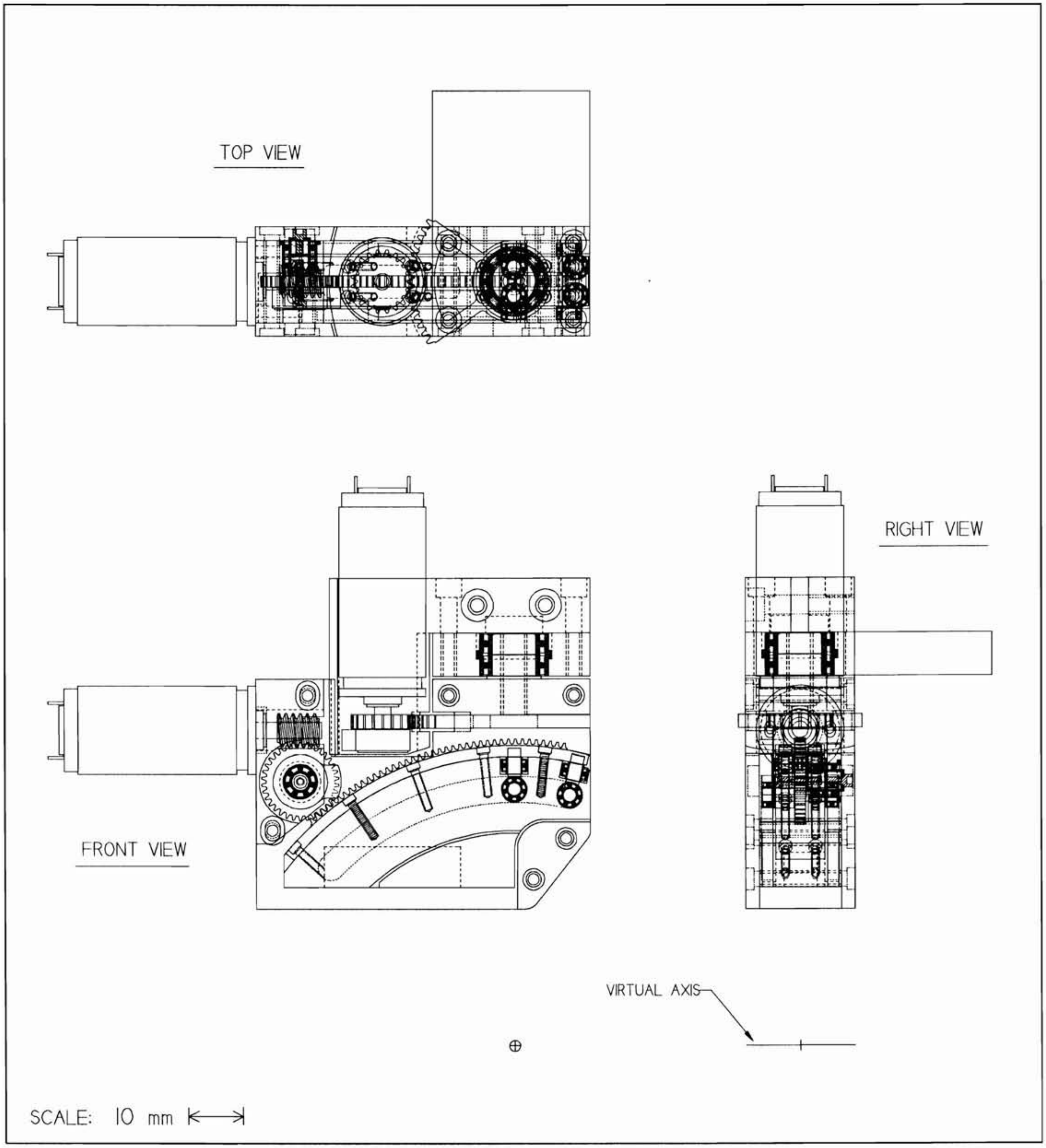

FIGURE 24: Composite CAD drawing representing the final state of the integrated design for the Phase-II glove controller thumb joint. Enlargements of these views are shown in the next three figures, and details of the components shown in Appendix D. (Dwg. GLOVE005.GCD)

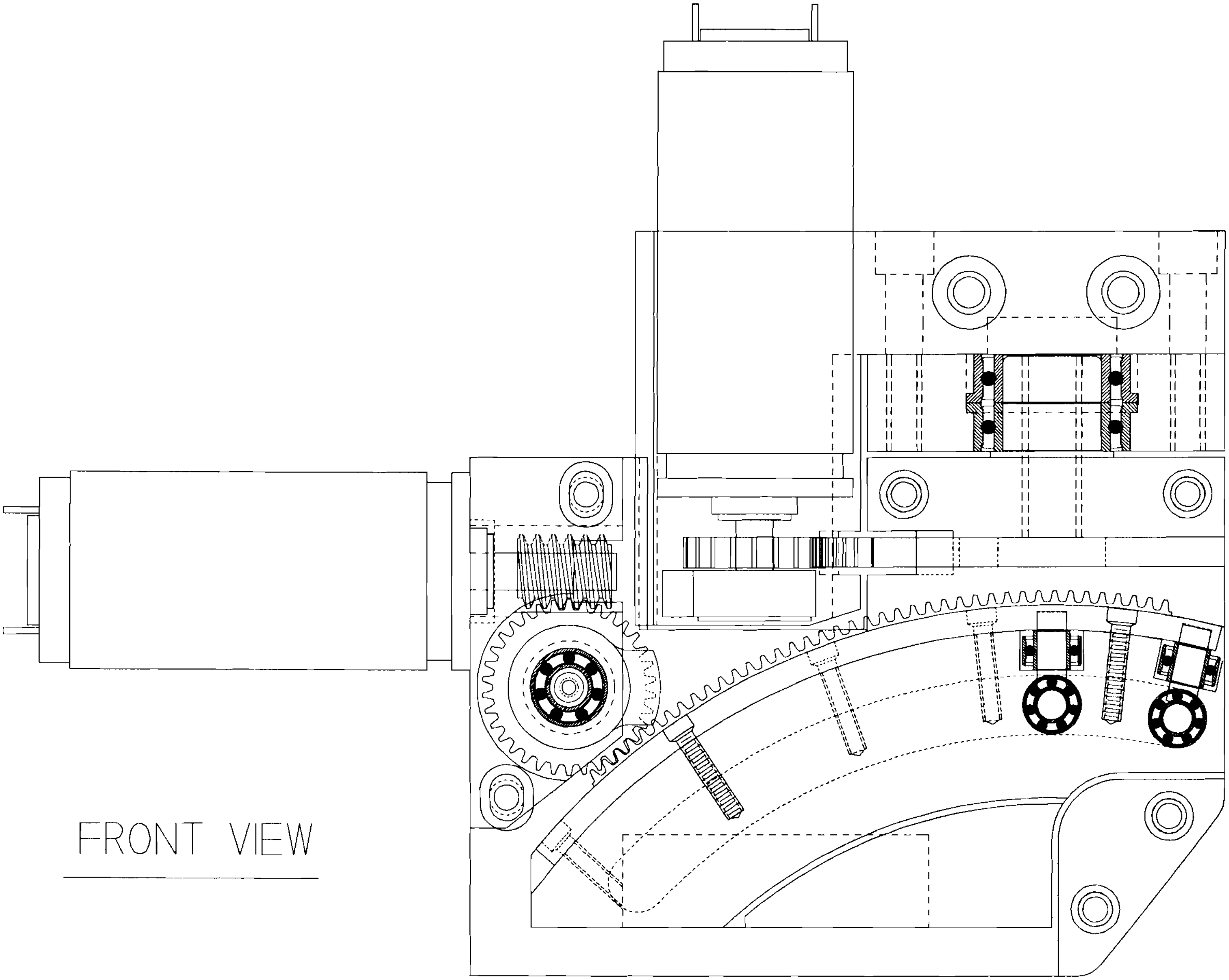

FIGURE 25: Front view enlargement (2X) of thumb joint design for Phase-II glove controller mechanism. (Dwg. GLOVE005.GCD)

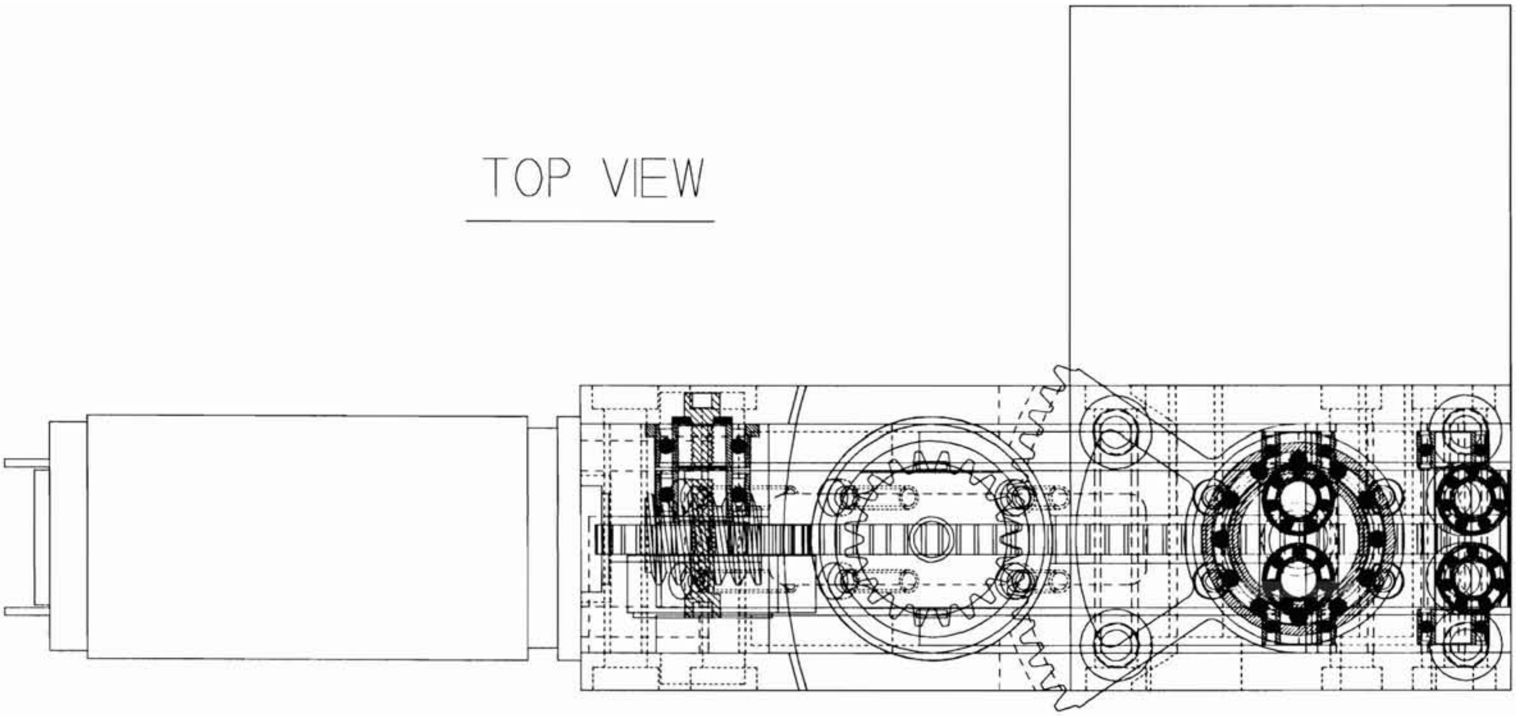

FIGURE 26: Top view enlargement (2X) of thumb joint design for Phase-II glove controller mechanism. (Dwg. GLOVE005.GCD)

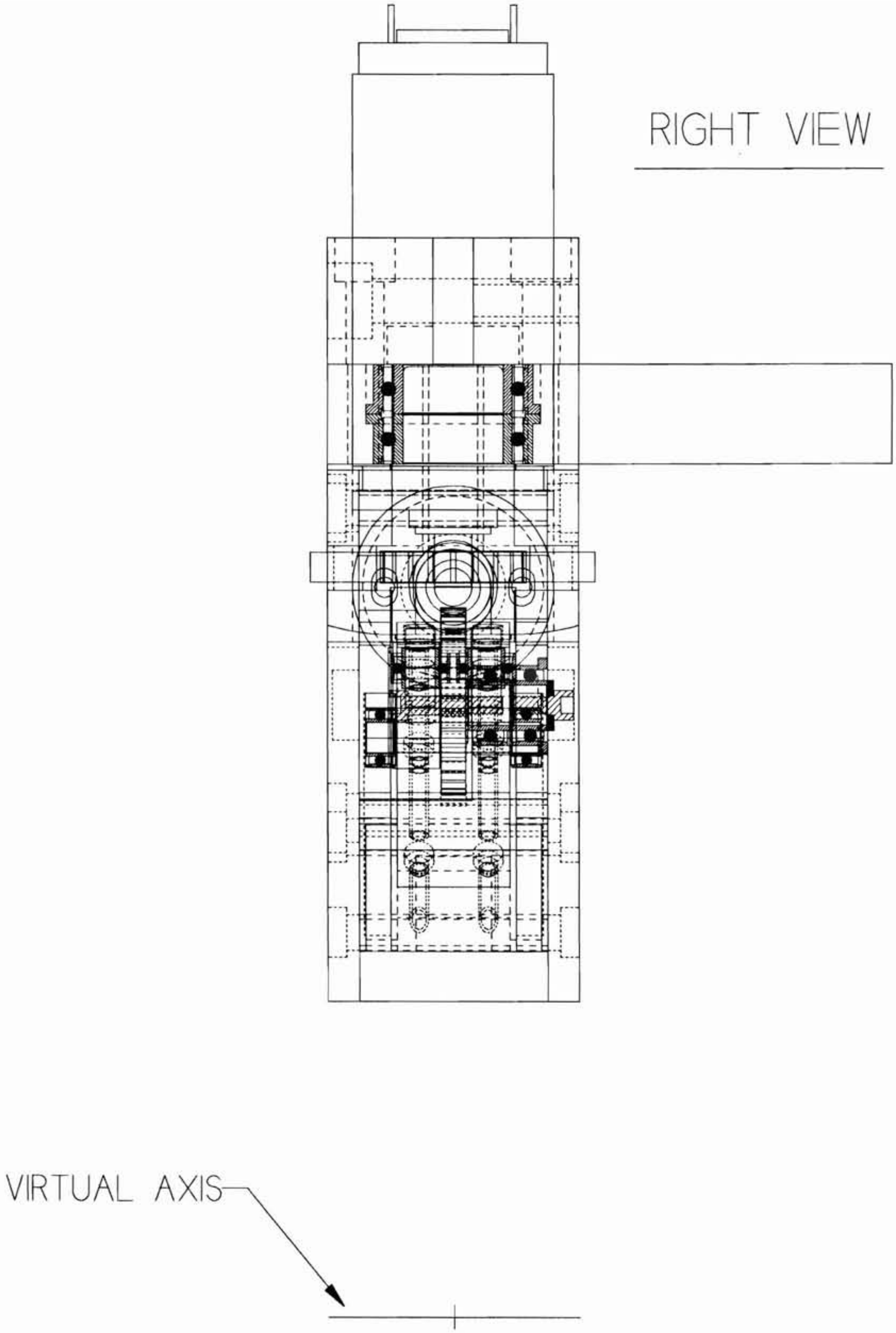

FIGURE 27: Right view enlargement (2X) of thumb joint design for Phase-II glove controller mechanism. (Dwg. GLOVE005.GCD)

The Phase-II thumb design as reflected in Figures 24 to 27 was arrived at by concentrating on the following objectives; (1) achieve the requisite 25mm standoff between the body of the joint (i.e. the interface between skin and metal) and the effective rotation point of the thumb; (2) insure the motor or other structural components do not collide with the wrist when the joint is fully open, and; (3) minimize or eliminate binding of the slider due to lateral forces exerted on the joint.

Due to the relationship between the slider radius of motion and the chord length of the slider (which is, in turn, governed by the link length of the thumb), a compromise was required to achieve a 25mm standoff, and consisted of the need to accept an angular thumb joint range of approximately 45°. Additionally, as may be seen be comparing the location of the Phase-I lateral drive motor with that indicated in Figures 24, the drive motor for the vertical axis (associated with DOF number 2) above the thumb joint had to be moved forward to achieve the desired 45° angular motion without colliding with the user's wrist.

One avenue that was explored early in the Phase-II effort was the feasibility of utilizing RC servo motors for lateral motion actuation: see Figure 28. The advantage of such an approach was that these units were small and produce high torques over a ±40° range, thereby significantly simplifying the drivetrain design task. However, a detailed analysis (via virtual CAD prototyping) indicated that the units were too large and poorly-proportioned to fit into the structure required of the thumb joint. Additionally, the backlash was also considered excessive, and the RC servos were therefore abandoned in favor of the previously-utilized MicroMo motors and integral gear reduction heads.

Several approaches were considered regarding the elimination of slider binding caused by application of lateral forces on the joint: Figure 29 illustrates several concepts. The ball-bearing support concept simply expands upon the Phase-I approach by the placement of several smaller bearing in the side plates to provide direct lateral support of the slider (note that the bearing depicted in this figure represent actual commercially-available devices). Additionally, the Phase-I problem of highly-loaded bearing support screws was somewhat addressed by utilizing a larger main bearing and thus a larger bearing support screw.

In contrast, the V-roller concept utilizes a single main bearing to provide slide support in both load directions. However, the advantage of mechanical simplification was offset by the need to strengthen the sideplates to support not only the side loads but also a significant vector component of the normal load transmitted to the plates by the V-bearing configuration. It was for the latter reason that the V-roller concept was dropped, and a variant of the ball-bearing support concept was selected, as illustrated in Figure 30.

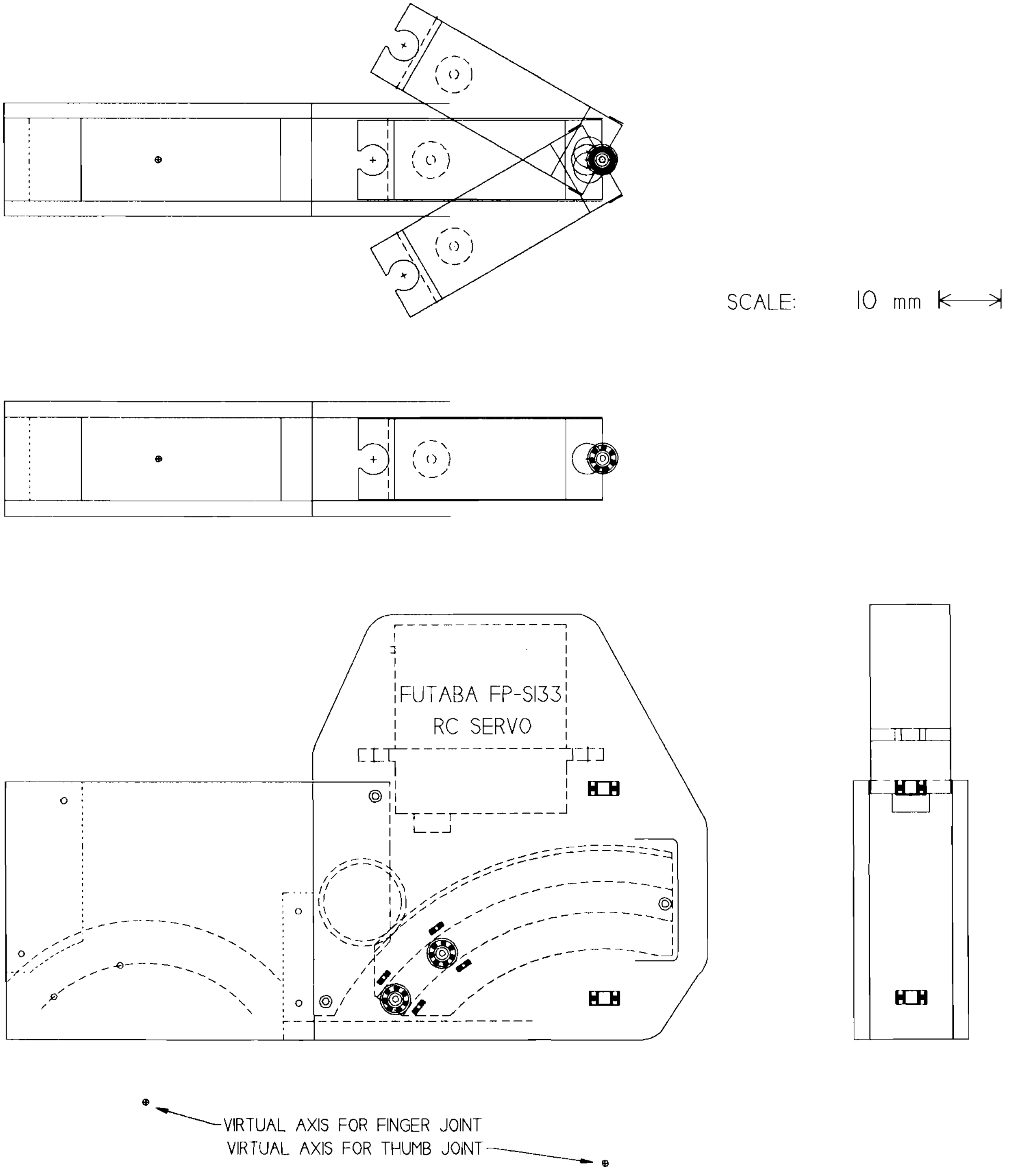

FIGURE 28: Early attemps to utilize hi-torque RC servo motors revealed that they were too large and poorly-adaptable to the space constrains imposed by the knuckle and thumb joints, and had unacceptably large backlash. (Dwg. GLOVE003.GCD)

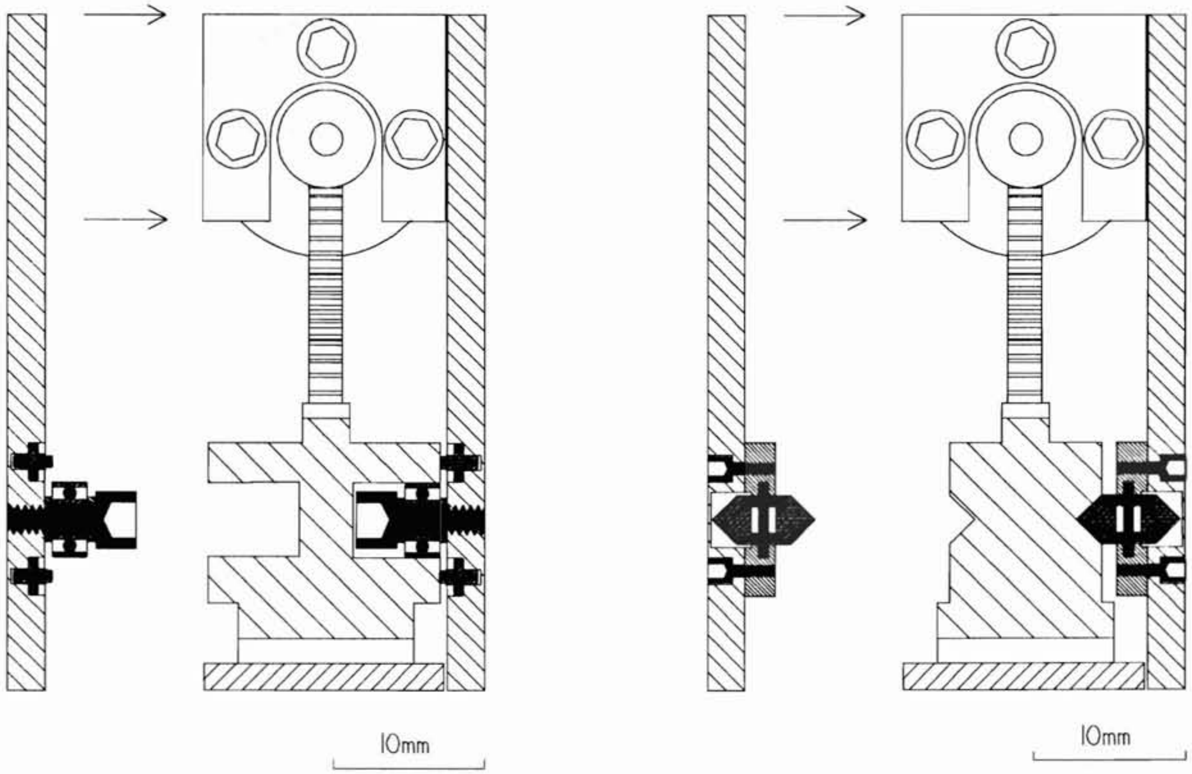

Slider Channel
Ball Bearing Support
(Six per side)

Slider Channel
V-Roller Support
(Two per side)

FIGURE 29: Several advanced slider support concepts designed to eliminate binding of the slider under lateral loads on the joint. The ball-bearing support concept expanded upon the original Phase-I design by the inclusion of lateral support bearings in the sideplates. In contrast, the V-roller concept performed the same function with only two V-bearings. (Dwg. GLOVE002.GCD)

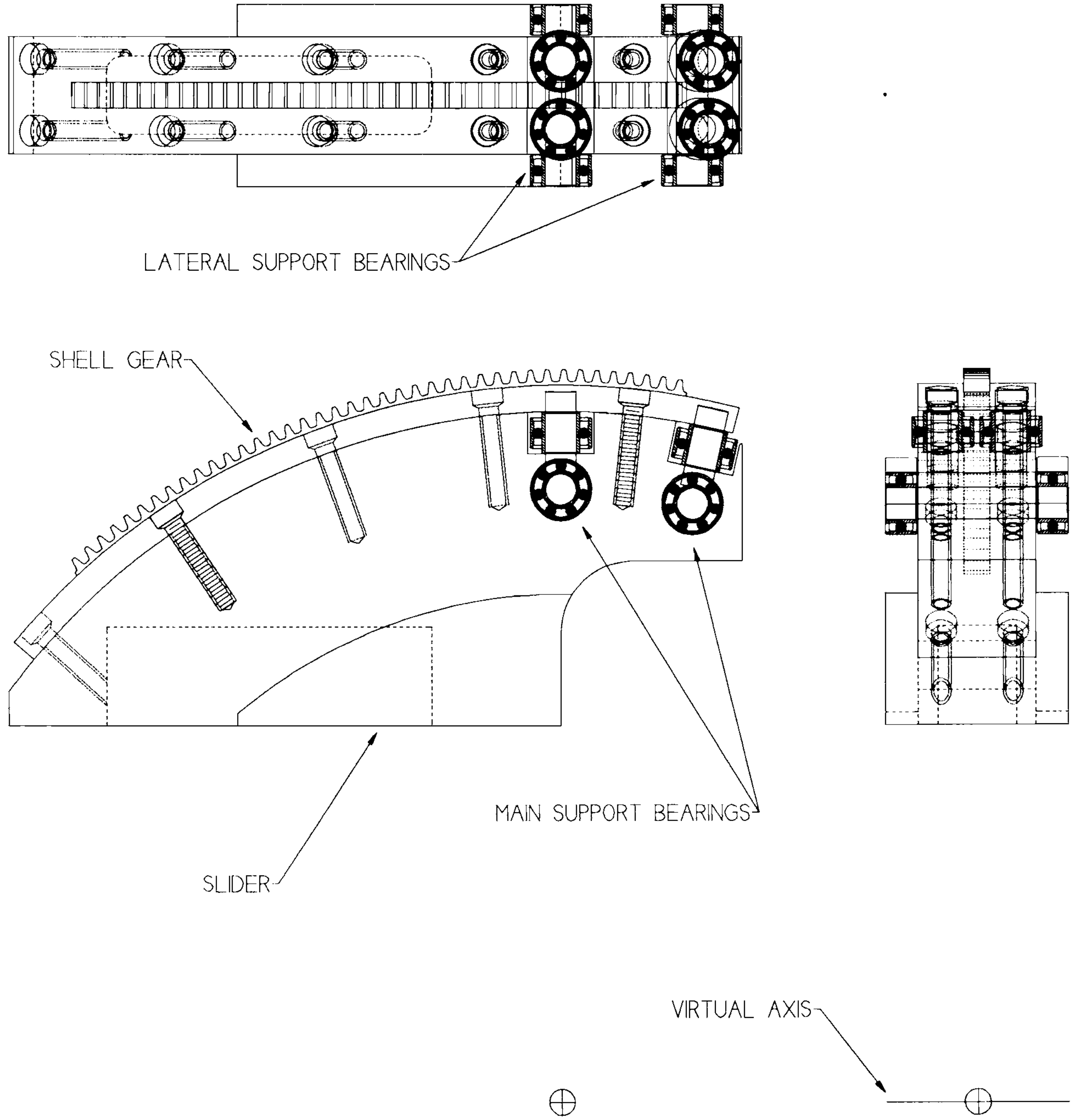

FIGURE 30: Detailed view of slider support bearing used in Phase-II joint design. A single (rather than dual pair) of lateral support bearing was placed above the main bearing and within the slider. (Dwg. GLOVE007.GCD)

Up to this point, the binding problem was addresses as though it were independent of other issues, and further modifications were found to be necessary when it was determined that the existing torque sensor design (i.e., a single deflection sensor mounted on the interfinger links, as shown in Figures 12 and 23) was inadequate. It was found to produce erroneous results whenever a significant component of the applied force vector was directed towards the virtual rotational axis. This was determined to be an inherent problem associated with the cantilever design instrumented by a single strain sensor, and an effort was then undertaken to revolve it. At this point, work on the binding problem was postponed, and an effort to design a true torque sensor assigned a higher priority.

One approach taken is illustrated in Figure 31, and involved segmenting the slider drive gear shell into a static outer border attached firmly to the slider body and an inner gear rib floating on an supporting web. Thus, a single optical displacement sensor mounted at a suitable location would be sensitive only to gear rib displacement created by applied torques or forces regardless of their vector orientation. This approach had the significant advantage of requiring little or no modifications to the bearing system previously described.

Other bearing support approaches were also simultaneously considered and developed. For example, an alternative solution to the binding problem was considered by mounting the main bearing on a post attached to the sideplate (rather than to the slider), and utilizing another miniature bearing mounted perpendicularly to but at the end of the main bearing mounting post. This approach is illustrated in Figure 32, which shows a small prototype of this "bearings on a post" approach. The advantages of this approach were relative mechanical simplicity and compactness. However, the approach involved the use of an extremely highly-stressed element (i.e., the post) attached to a relatively thin plate (i.e. the sideplate). This was judged to be prone to failure and requiring high-strength alloys to implement effectively (e.g., tool steel, or titanium).

Another method of measuring the torque were also explored. Instead of utilizing a webbed shell gear to measure torque, a standard spur gear was modified by machining radial webs, as illustrated in Figure 33. The primary advantage of this approach was mechanical simplicity, as a standard commercially-available gear could be used as the basis for this component. However, significant effort would be required to modify other joint components such as the slider and bearing system to accommodate the new gear design. For this reason, this approach was not implemented, but was retained as a backup option should the shell gear approach prove unfeasible.

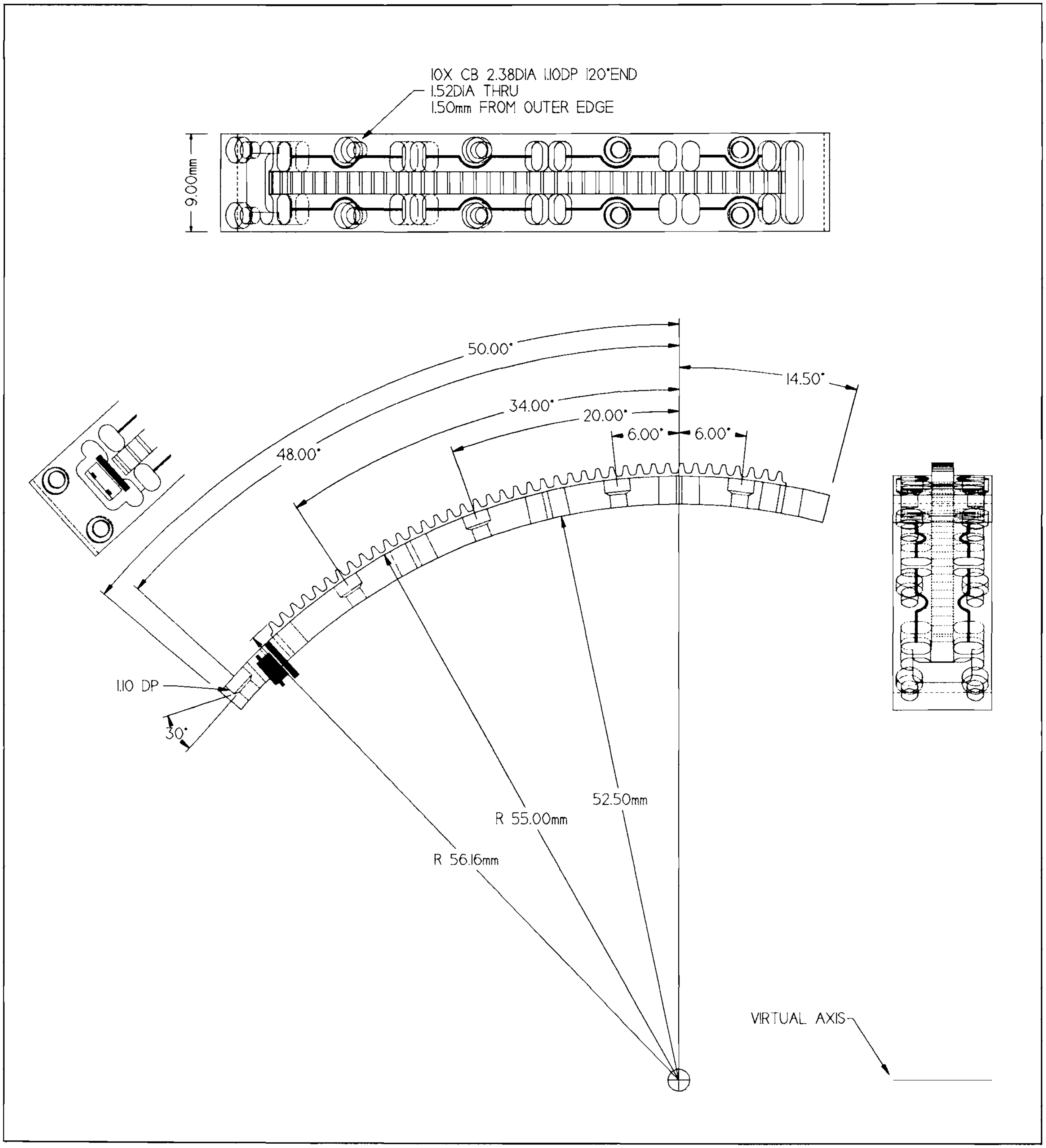

FIGURE 31: Alternative approach to sensing finger joint torque by measuring the displacement of a web-supported gear rib (note optoswitch sensor at left end of structure). (Dwg. GLOVE023.GCD)

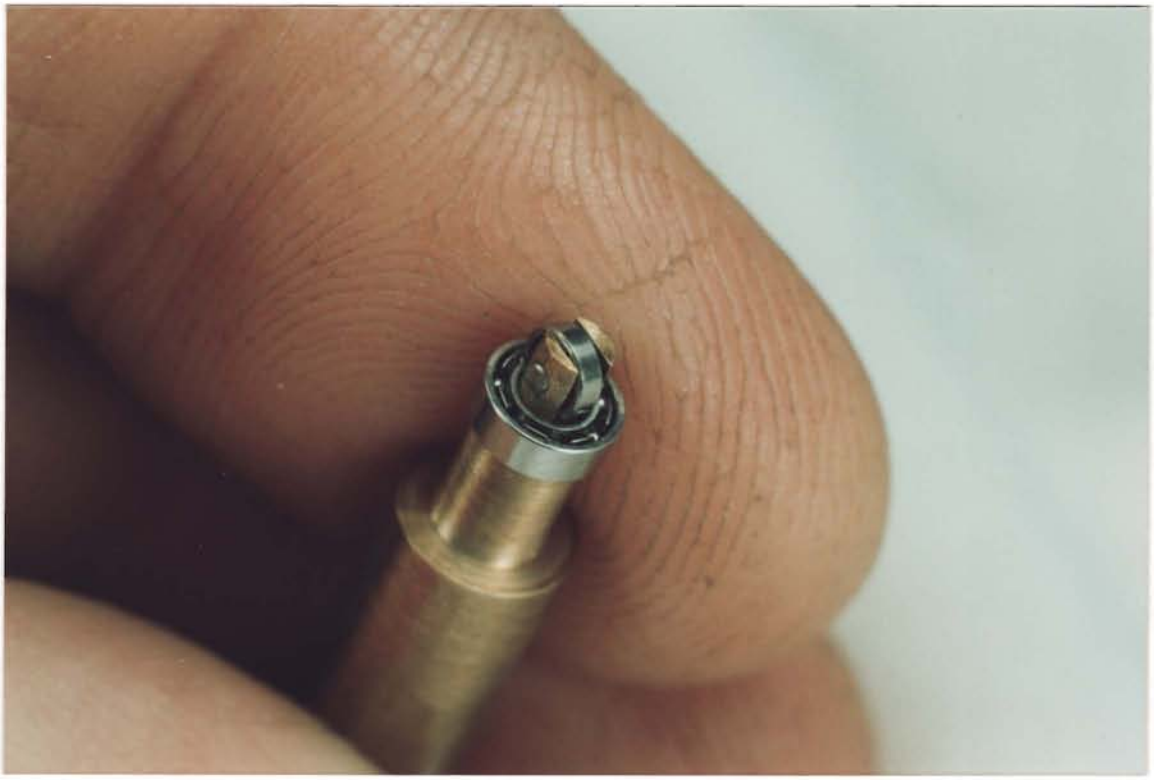

<u>FIGURE 32</u>: Alternative bearing arrangement for addressing binding under lateral loads involved mounting the main bearing on a post and locating a smaller lateral support bearing in the center of the post and oriented perpendicularly to the main bearing axis. (Photo. GC060793R1-19)

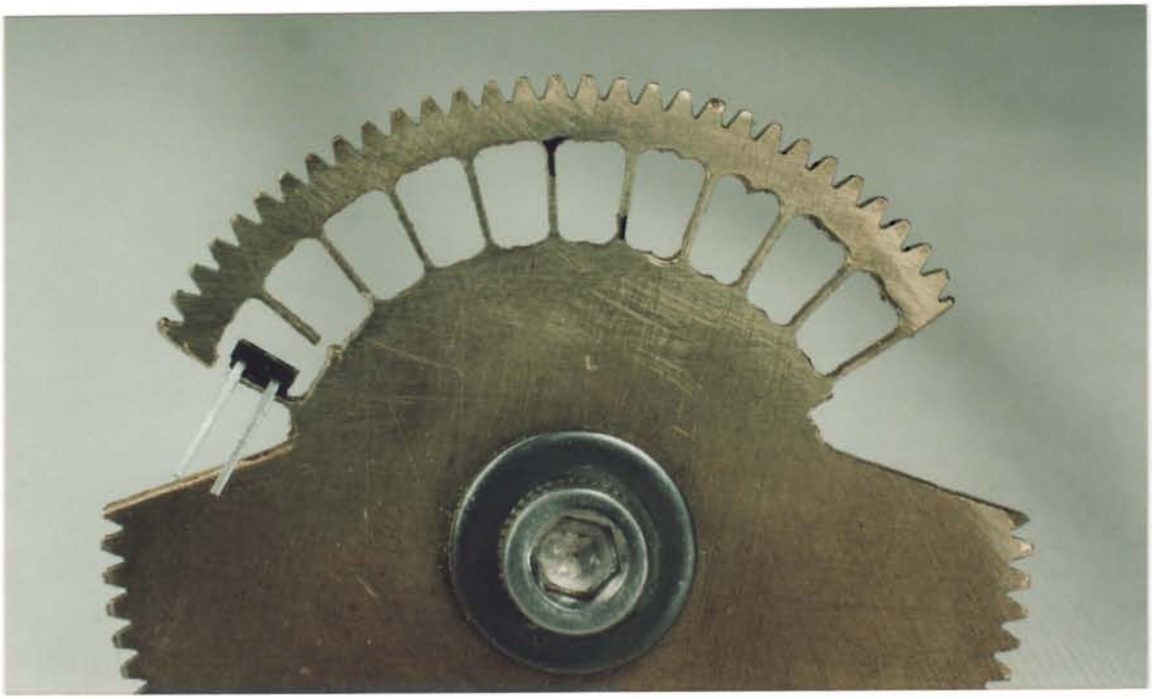

FIGURE 33: Prototype demonstrating an alternative method of measuring torque at a virtual joint by installing a radial web in a standard spur gear and detecting the tangential gear rib displacement relative to the core by an optical displacement sensor. (Photo. GC150595A-10)

Not all problems recognized in the Phase-I work were adequately addressed. For example, it was recognized that mating of the worm gear idler with the slider spur gear was not standard gear design practice. However, space constrains were particularly critical in this area, especially with the introduction of an integral torque sensor within the slider. Future development efforts should strive to remove this problem by considering approaches such as: reducing the thickness of the shaft encoder and placing it in a different location; using an offset spur idler gear coupled to the worm gear.

4. DESIGN of ADVANCED TACTILE TELEPRESENCE SYSTEM

4.1 Introduction

A photograph of the original Phase-I Tactile Telepresence System (TTS) may be seen in Figure 4.1-2 of the Final Report for Phase I, or in Figure 1 of this report. It consisted of a 37-taxel tactile sensor, associated hardware-based signal processing unit, a 48-channel pneumatic driver, and a 37-element fingertip-shaped tactile display with taxels distributed in the same manner as taxels in the sensor. Processing speed was the principal reason for implementing the signal acquisition, calibration, and processing function in hardware, as all data channels were read and processed in parallel which avoided the inherent bottleneck experienced with single-processor "software" approaches. During the course of system evaluation during Phase-I and Phase-II, the following problems or disadvantages of the Phase-I TTS implementation were noted:

- Lack of modularity in construction made both the tactile sensor and tactile display extremely susceptible to complete incapacitation from a variety of sources, e.g., the tactile sensor could suffer optical fiber breakage, or the tactile display suffer from crushed or severed pneumatic tubing. Both the sensor and display and their corresponding signal processor and driver were fabricated as monolithic units, and once damage occurred anywhere in the system there was little option but to undertake a major rebuilding process.

- Significant sensor drift occurred over a relatively short time (e.g., 5-10 minutes), thus requiring constant readjustment of the baseline tactile sensor light level intensity to re-zero the TTS output.

- The sensor calibration process was manual (e.g., involving the adjustment of pots), and was very slow. Additionally, presence of significant drift previously mentioned made it virtually impossible to initially adjust all sensors to have the same zero or baseline point (i.e., a point below which no TTS activity occurs). As a result, satisfactory calibration could never be achieved.

- The rigid tactile display substrate was effective in allowing the use of the TTS by a wide variety of user finger sizes, but, in general, the lack of a good circumferential fit about the finger of most users resulted in data voids and no data conveyance to those portions of the finger not in contact with the display.

The objective of this Phase-II effort was to address these problems, and to advance the state of development of the Tactile Telepresence System. Specifically, the following areas were to be explored:

- Increase the ease of use, reliability (i.e., ease of repair), and compactness of the TTS,

- Increase the tactile sensor and display element number from 37 to approximately 48,

- Remove the calibration and drift problem by performing data acquisition, calibration and processing functions under microprocessor control,

- Design and fabricate three advanced tactile display drivers (e.g., manifold arrays) capable of accommodating up to 48 taxels each, and containing advanced PWM controller circuitry fabricated using PCB technology and capable of being mounted directly within the driver module enclosures.

A block diagram representing a three-module TTS is shown in Figure 34, each module containing a 41-taxel fingertip-shaped tactile sensor and display subsystem. The image processing and display control function would be performed by a 486-class PC processor. The section below describe the work that was performed toward developing such a TTS system, and the level of accomplishment at the close of this program.

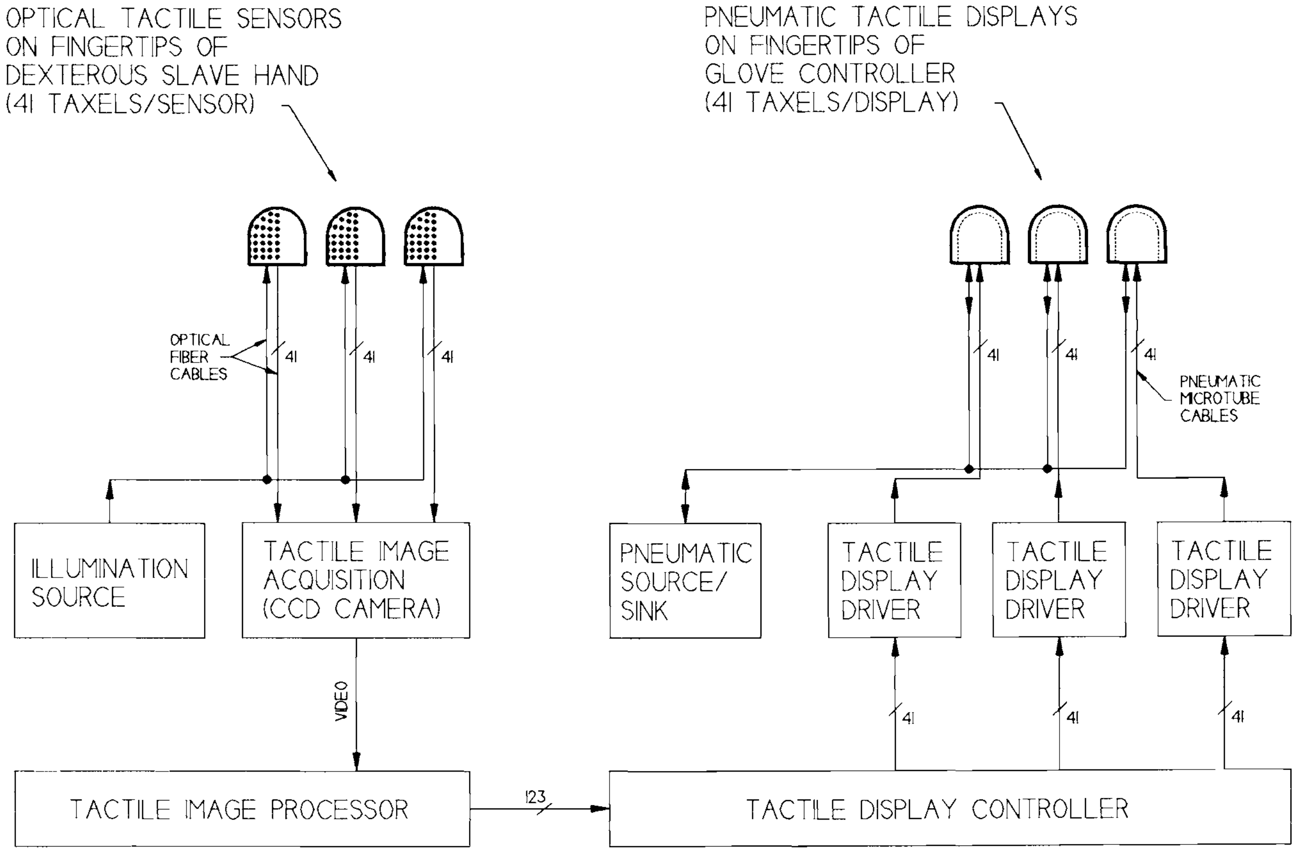

FIGURE 34: Block diagram representing a three module Tactile Telepresence System, each module containing a 41-taxel fingertip-shaped tactile sensor and display. The tactile image processing and display control function would be performed by a 486-class PC. (Dwg. GC_BLOCK.GCD)

4.2 Tactile Sensor Development

A general list was assembled regarding the improvements desired over the Phase-I tactile sensor, and was driven by the desire to increase the ruggedness of the device and reduce the fabrication and repair cost/time:

- Modularize elements of tactile sensor to enable rapid repair, e.g., cables, cover, illuminator, base structure, waveguide element, pressure transduction sheet or interface, and fiberoptic input array.
- Use of a standard baseplate on the back of the sensor enabling attachment of the sensor to various robotic hands or slave devices by mean of readily-exchangeable mounting stubs.
- Utilize an internal light source to energize the sensor, rather than an external fiberoptic illuminator and associated FO cable.
- Connectorized, off-the-shelf, fiberoptic image cable (and illuminator cable, if used) to reduce fabrication costs and permit simpler repair.
- Add taxel position indicators on the cover of the sensor.
- Design the sensor to enable ready interfacing to a general purpose pressure cell for rapidly calibrating the tactile sensor.

The current state of the Phase-II tactile sensor design is shown in Figures 35 and 36 (detail drawings of the individual components are presented in Appendix E), and may be contrasted to the monolithic Phase-I tactile sensor shown in Figure 37. The Phase-II sensor design is modular and consists of five main components: cover, image fiber connector, waveguide, core, and input fiber assembly. This approach is expected to significantly improve sensor maintenance, reliability, and cost, as only a few screws need to be removed to assemble or replace all major sensor components (in contrast, no such disassembly was possible with the monolithic Phase-I sensor).

<u>FIGURE 35</u>: Partial prototype of a 41-taxel, fingertip-shaped tactile sensor developed during this Phase-II program. The completed unit would consist of five modular elements: cover, image fiber connector, core (with integral backplate), waveguide, and input fiber array (shown without cover or image fiber connector). (Photo. GS150595B-16)

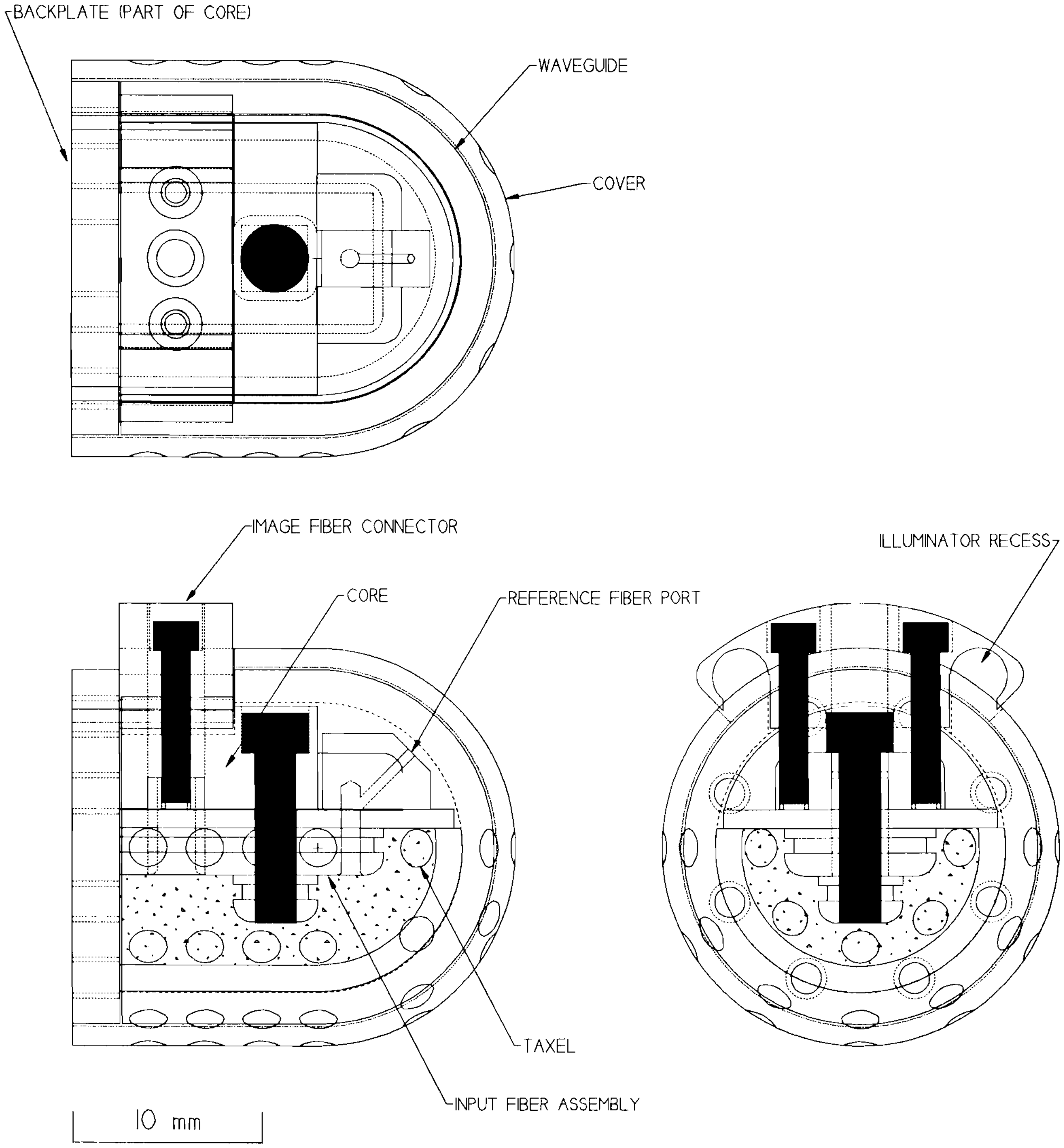

FIGURE 36: Composite drawing of the Phase-II tactile sensor design. The sensor consists of five modular elements (cover, image fiber connector, waveguide, core, and input fiber assembly) that significantly increase reliability and repairability and decrease assembly cost and time. (Dwg. TSEN2001.GCD)

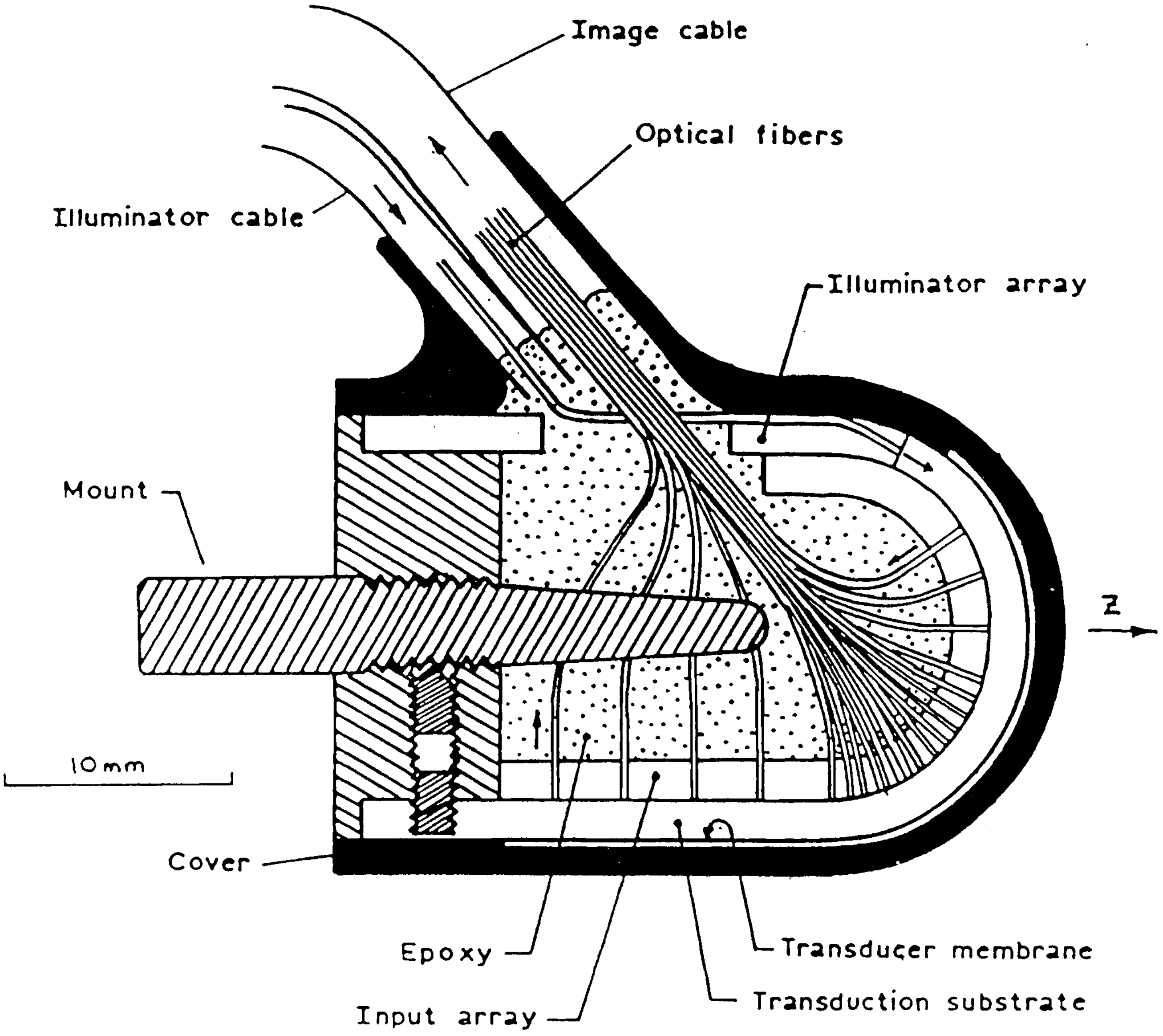

FIGURE 37: Cross-sectional view of the fingertip-shaped tactile sensor developed in the Phase-I feasibility study.

At present, only the core, fiber input array, and waveguide have been fabricated, as shown in Figures 38 to 42. The central structure to which all components of the sensor are attached was the core (Figure 39). The back plate of the core contains an octagonal array of mounting holes which can accommodate a wide variety of attachment interfaces to fingers of robotic hands, e.g., Salisbury Hand (this may be contrasted to the Phase-I sensor in which the finger attachment mount required specification prior to fabrication, and was thereafter fixed and unchangeable). Additionally, the fiber optic image cable connector and fiber input array are attached to the front of the core via a single screw. The waveguide is then slipped on and held in place by the cover (the latter has not yet been developed, nor the means of its attachment established).

The function of the fiber input array (Figure 40) is to gather light from the taxel areas of the cover for conveyance out to the video camera for data capture. This was accomplished by creating a fiberoptic reducer with an arboreal shape in which individual fibers that gather signals at each taxel area are grouped together in a single bundle at the exit point under the image fiber cable connector. The distribution of fibers on the outer surface of the fiber input array and the fiber bundle at the connector is shown in Figure 41.

The waveguide (Figure 42) was fabricated from the tip of a polycarbonate centrifuge tube, and all edges covered with aluminized Mylar to minimize edge-light losses. One important change in the Phase-II sensor was the use of an internal light source to illuminate the waveguide. This offered the significant advantage of eliminating one of two fiberoptic cables attached to the sensor, thereby improving sensor flexibility and ruggedness. However, in the absence of a sensor cover, this approach was not evaluated for thermal heat loading effects such as melting or significant softening of the plastic materials used in construction of this sensor. Another important addition to the Phase-II sensor was the inclusion of extra optical fibers (see Figure 41) to monitor the illumination level on a non-active portion of the waveguide surface, thereby allowing for automatic adjustment of the sensor baseline (zero) point.

Initial plans to fabricate a sensor cover were disrupted when it was discovered that the waveguide dimensions were highly non-uniform. A detailed evaluation of the waveguide revealed the presence of an undesirable longitudinal taper, variable wall thickness around the circumference, and significant dimensional variation from one centrifuge tube to another. As a well-defined waveguide structure was required for proper mating of the pressure transducer embedded in the cover and the waveguide, cover development was put on hold until other sources of suitable waveguides could be located, e.g., custom fabrication by injection molding or casting.

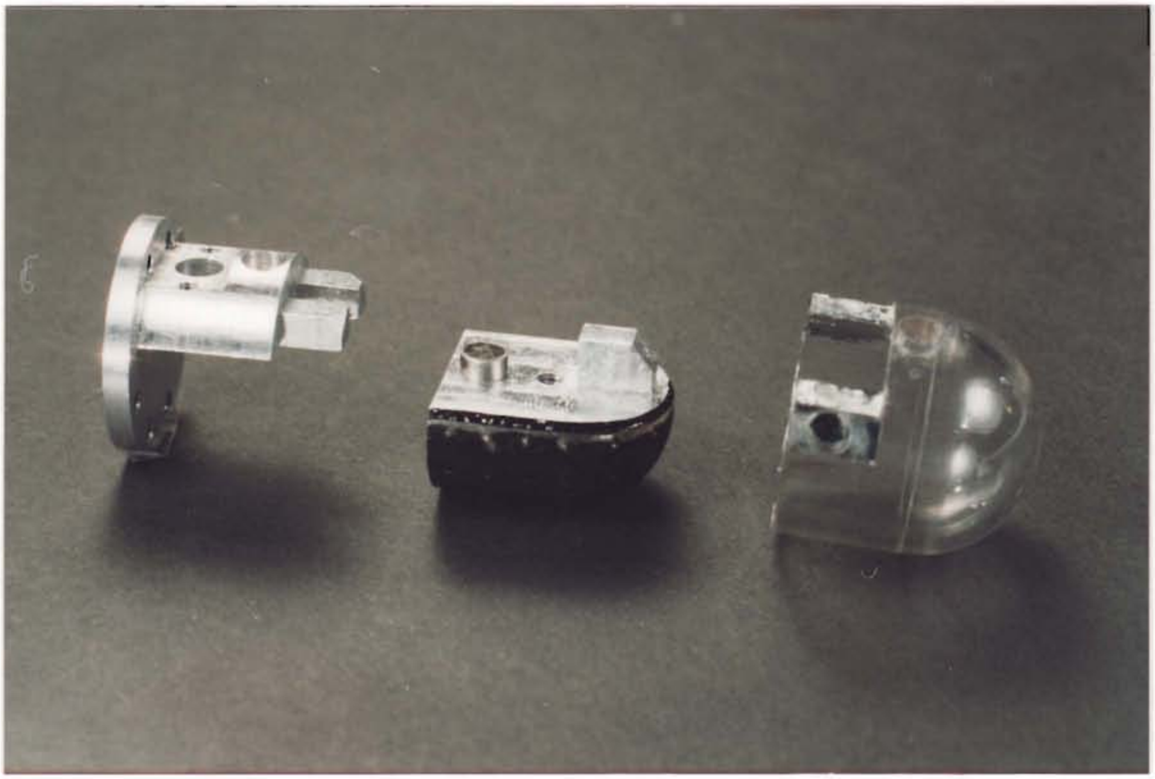

FIGURE 38: Three modular components of the Phase-II tactile sensor. From left-to-right are the core, input fiber array, and waveguide. Not shown are the cover and image fiber connector. (Photo. GC150595B-26)

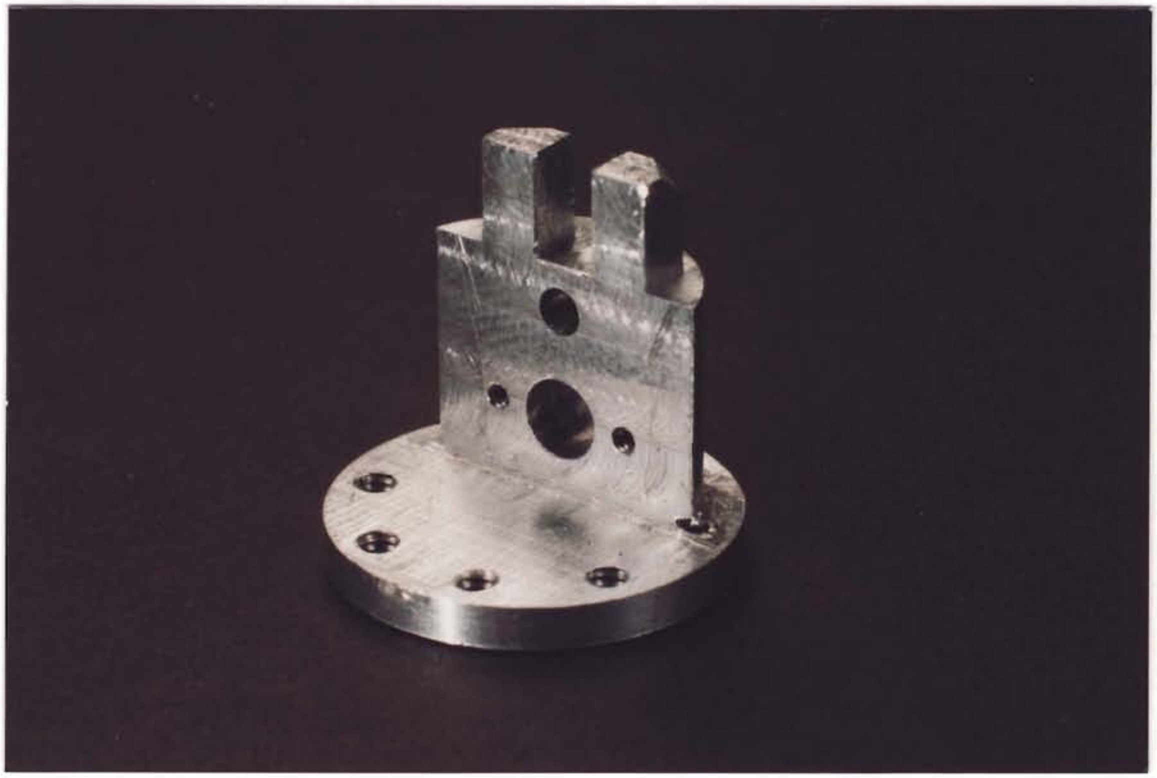

FIGURE 39: Core module of Phase-II tactile sensor is the structural support for the other modules, and has a backplate to which custom finger-mounting adapters may be attached. [Photos. GC150595B-24 (top) and -22 (bottom)]

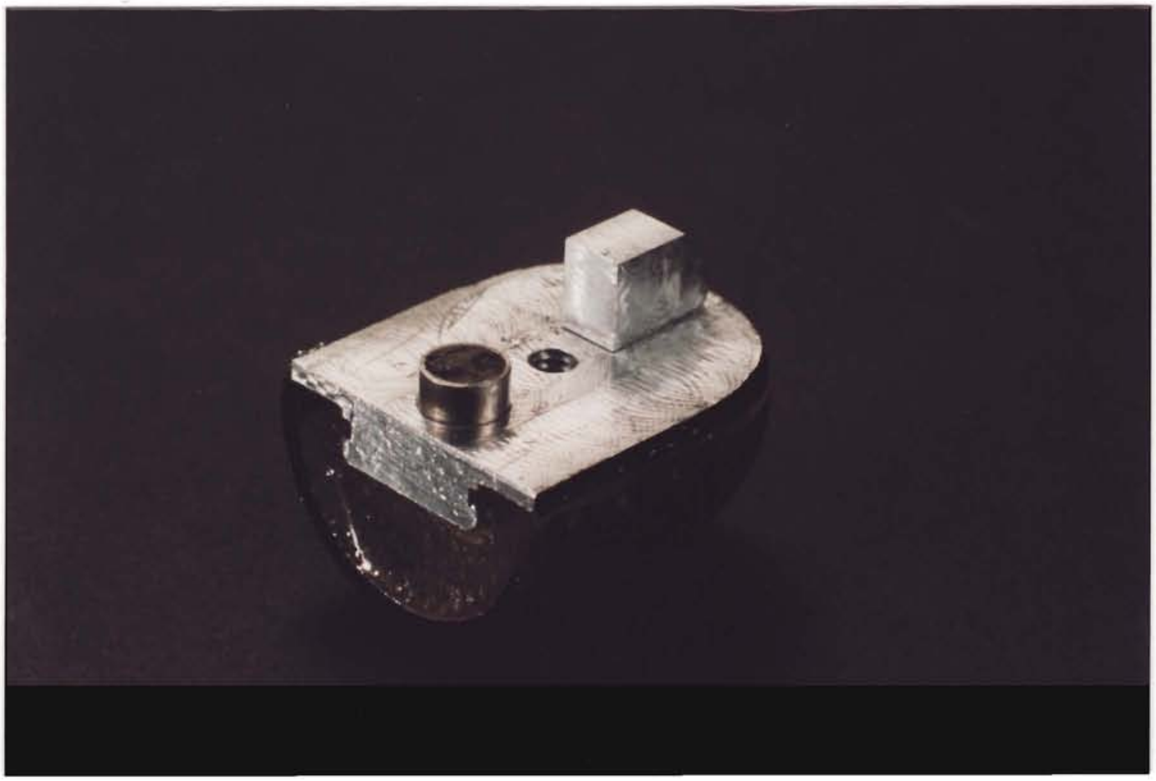

FIGURE 40: Fiber input array module of Phase-II tactile sensor captures light from the pressure transduction areas on the waveguide (taxels) and transmits the data to the video camera via fiberoptic bundle (protruding cylindrical structure). Block at right contains reference fibers. (Photo. GC150595B-18)

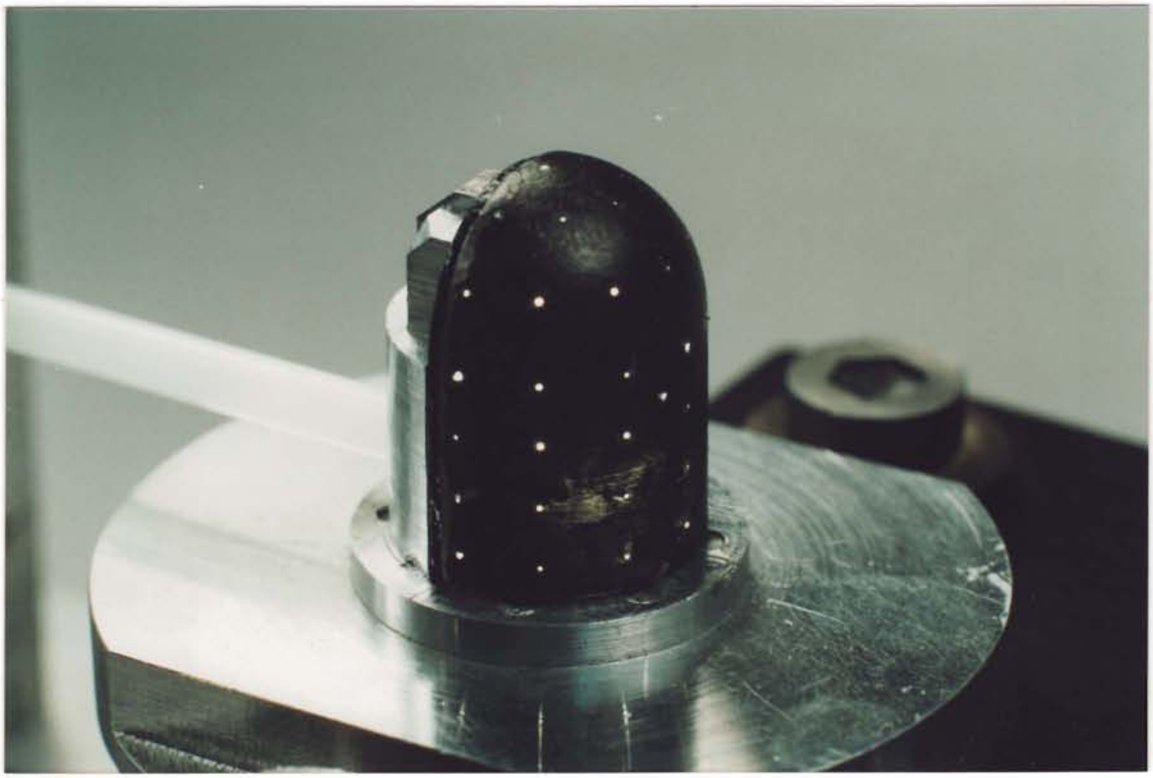

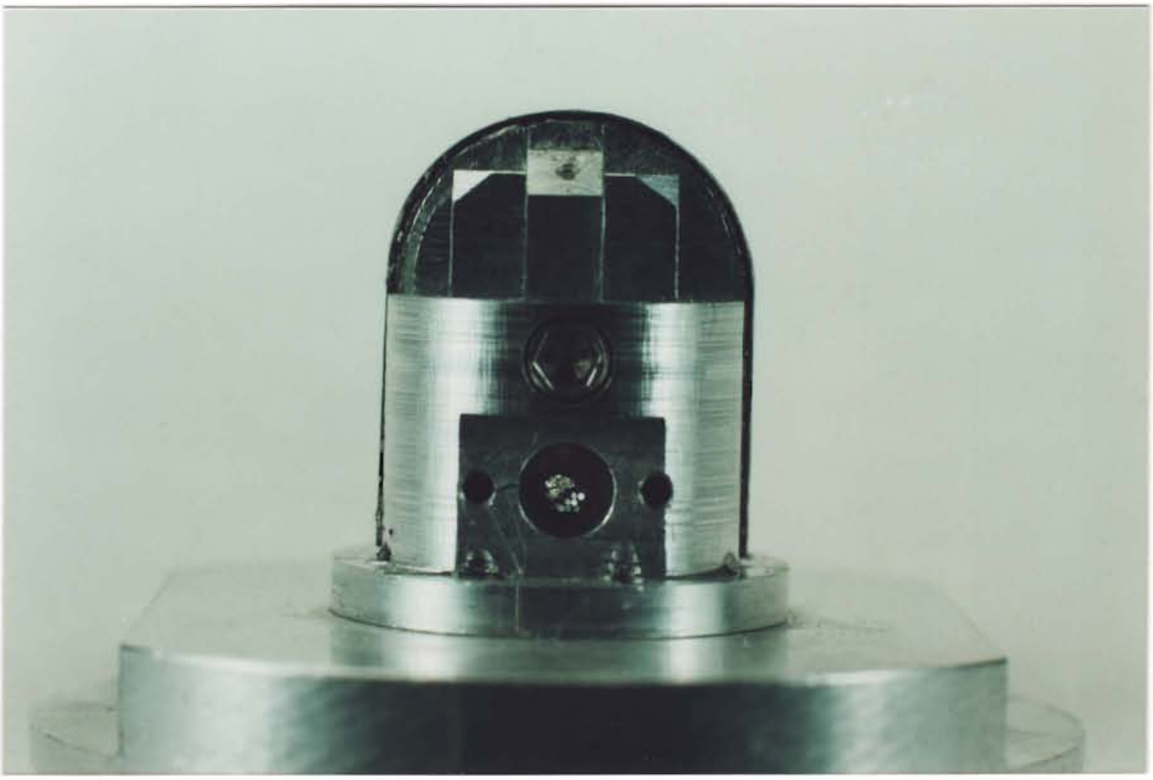

FIGURE 41: Top: Back-illumination reveals the locations of the sensor fibers on the surface of the input fiber array. (Photo: GC150595B-02). Bottom: Forward-illumination reveals location of sensor fibers at output end of the input fiber array (note small dots within circular opening of core, whereas large dots are reference fibers). (Photo: GC150595B-06)

FIGURE 42: Waveguide module for Phase-II tactile sensor. Reflective Mylar film has been applied at all edges to minimize light losses through those locations. (Photo: GC150595B-08)

Current ideas regarding the cover design are shown in Figure 36 and Appendix E, and include such features as a rigid interior shell holding the taxel elements. The latter would be made of a suitable colored material (e.g., white silicone rubber), thereby creating the needed transduction surface texture and color at the waveguide (in contrast, a separate transduction membrane was utilized in the Phase-I sensor) and providing an externally-visible indicator of taxel location (the latter feature was an especially notable omission from the Phase-I sensor). Encouraging results for this approach were obtained in several studies performed regarding bonding of differently-colored silicones to one another (e.g., white to black silicone) and adhesion of silicones to aluminum.

The uniformity of the tactile signals was examined utilizing a white polyethylene sheet as the pressure transduction membrane, and it was observed that in some cases the signal level varied by factors of 50 or 100 over the full area covered by the tactile sensing surface. This variation was reduced to factors of 3 to 6 by repositioning the internal light sources, but additional development work is still needed to create a more uniform illumination pattern within the waveguide.

At present, the sensor development has not been completed, and additional work still needs to be done in the following areas:

- Develop a viable means of combining the pressure transduction membrane with a cover. One possible approach involves the use of a thin, perforated aluminum shell filled with colored silicone elastomer.

- Verify that an internal light source will provide adequate illumination without melting or seriously degrading the polycarbonate waveguide or other plastic components.

- Optimize the geometry of the waveguide and locations of the internal light sources to create a more uniform light distribution pattern at each taxel.

- Locate a commercial source of coherent optical fiber cable for transmission of the tactile image data to the video camera.

- Fabricate or locate a waveguide that involves less dimensional variability than presently obtainable. Explore the option of custom injection molded or cast waveguides to much higher dimensional tolerances.

4.3 Tactile Display

The Phase-I tactile display (see Figure 1) consisted of 37 pneumatic taxels mounted in a hard polycarbonate shell and distributed in a uniform density about a fingertip (the device is described in greater detail in Section 4.3 of the Phase-I final report). Though effective, numerous problems have been identified with the original design:

1. Relatively low operating pressure (200kPa) resulted in lower taxel stimulation levels compared to results obtained on other systems that utilized higher pressures (700kPa).
2. Evacuation of the taxels was not used to improve taxel response rate and stimulation effectiveness.
3. Rigid taxel substrate prevented full contact of the display array with an inserted fingertip.
4. Fabrication of latex taxels was time consuming and labor intensive.
5. Short pneumatic cable length (approximately 1.5 meter) limited the maneuverability of the display.
6. Insufficient flexibility of the pneumatic tube cable.

The first two deficiencies were addressed by utilizing an advanced display driver design that incorporated the use of high-pressure valves (700kPa/100psi operating pressure) and a vacuum exhaust system, as described in the following section. Some work was also performed with regard to Item (3) and the creation of a flexible taxel substrate to permit conformance and full-contact of the display with the skin of the fingertip at all times and to accommodate a wide range of operator's finger sizes. Feasibility of the general concept was provided by an inactive tactile display prototype based on a flexible latex substrate, and is shown in Figure 43. It was significantly thinner and less bulky than the Phase-I display, and could readily accommodate a wide variety of finger sizes while maintaining good contact between all taxels and the skin.

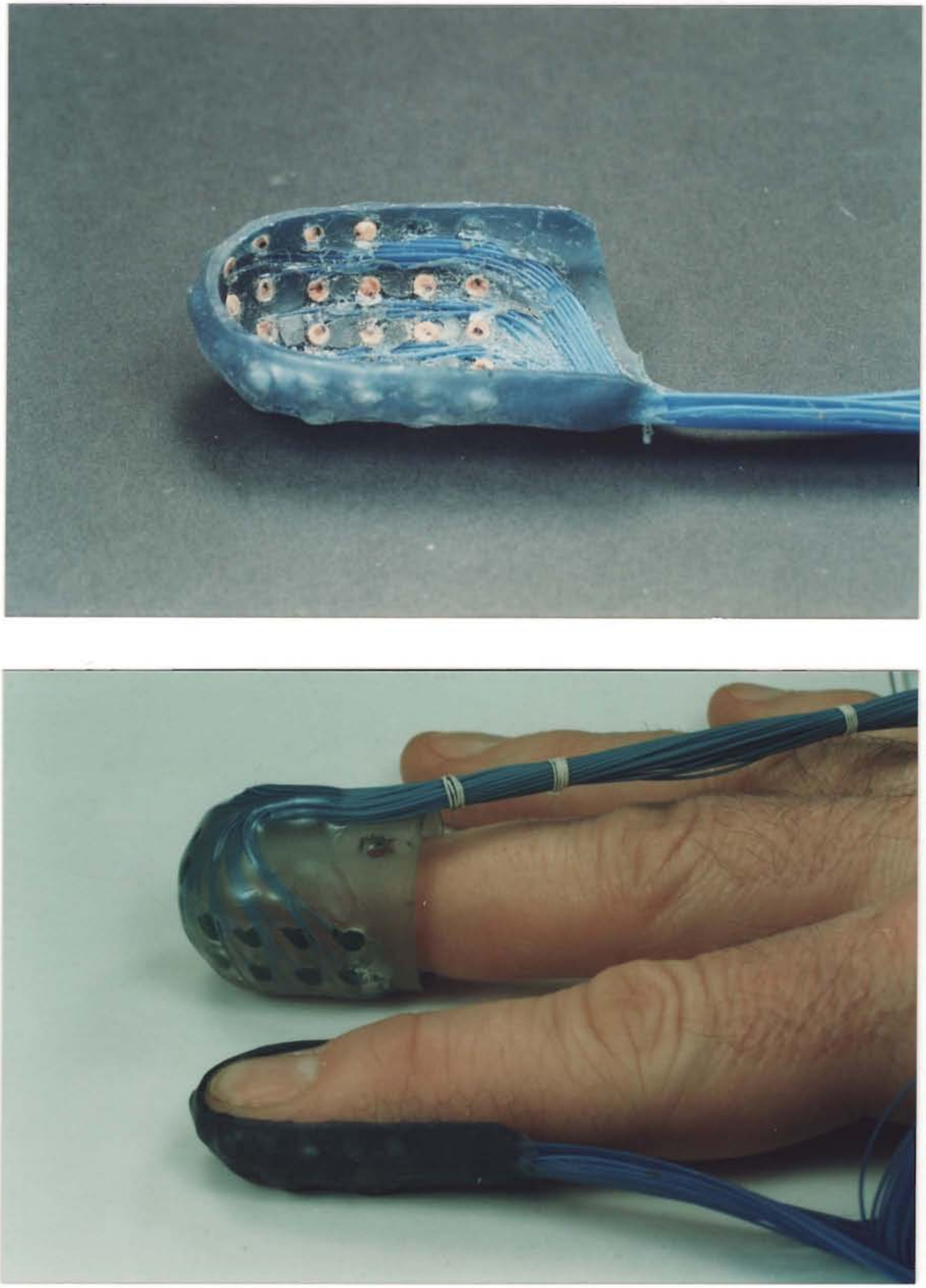

FIGURE 43: Top: Inactive tactile display prototype with 41 dummy taxels embedded in a flexible latex substrate (Photo. GC170595A-08). Bottom: The flexible tactile display is much smaller and easily conformable to a wide variety of finger size, as compared to the larger and inflexible Phase-I device (Photo. GC160595A-16).

Additionally, Item (4) was addressed by beginning the development of new taxels. After considering various options, the most promising approach consisted of attaching a flexible membrane (such as a silicone sheet) to a rigid taxel body by means of a suitable adhesive (e.g., silicone gel). The target dimensions of the new microtaxel were 1.5mm thick x 2.5mm diameter. This approach was pursued only to the extent of fabricating the hard taxel bodies and attachment of the pneumatic tubing to the bodies, as shown in Figure 44. Though all development was not completed, the feasibility of this general approach to fabricating microtaxels seemed good.

At this stage of the tactile display development, the issue of cable routing throughout the glove controller was reconsidered. The original approach was to bundle the electrical and pneumatic cables and route then "over the top" of the glove controller mechanism. Though obviously workable, a neater approach was sought in which all wires and tubes would be gathered into a ribbon format and routed in a rectangular cable duct positioned between the operator's fingers and the controller mechanism. To test the concept, a small prototype was fabricated which consisted of two rectangular channels into which were placed two pneumatic ribbon cables containing twenty-five 30AWG Kynar tubes sandwiched by several electrical ribbon cables: see Figure 45. The cable assembly was mounted with adhesive on the controller finger and given a preliminary evaluation. The main positive observations were that the approach was very neat and compact compared to the "over the top" cabling approach, and for the most part the ribbons slid over one another with no binding. However, the disadvantages or problems noted were:

- At high joint bend-angles it was observed that the outer ribbon cable had difficulty pushing back into the cable channel. It was expected that refinement of the cable material, selection of suitable lubricants on the cable or channel, and design of the channel entrance area would all contribute to solution of this "feeding" problem.

- The ribbon cable adds significant standoff distance between finger and controller, thereby requiring a lengthening of the virtual joint radius and a consequential shortening of the angular travel range (for a fixed finger segment length).

- The design/prototyping loop may be greatly lengthened by the need to utilize custom ribbon cables.

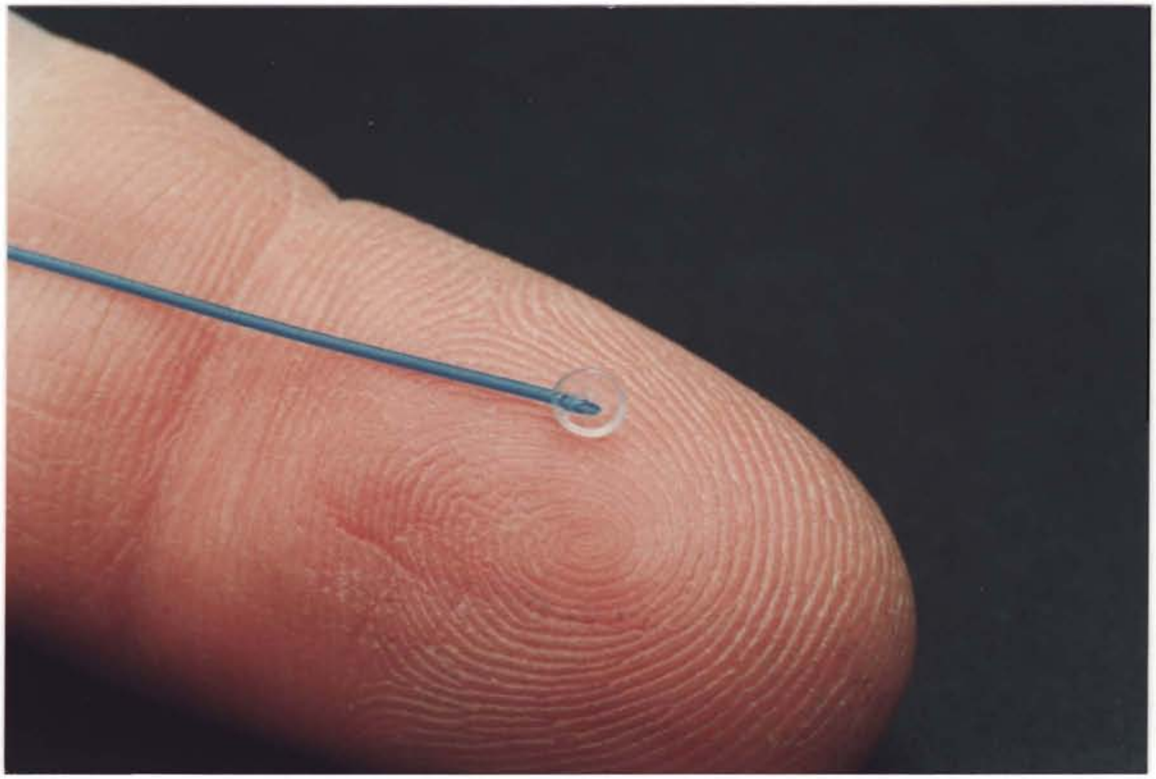

FIGURE 44: Prototype of a polycarbonate microtaxel body (1.5mm thick x 2.5mm diameter) attached to a 30AWG Kynar tube (Photo. GC170595A-02).

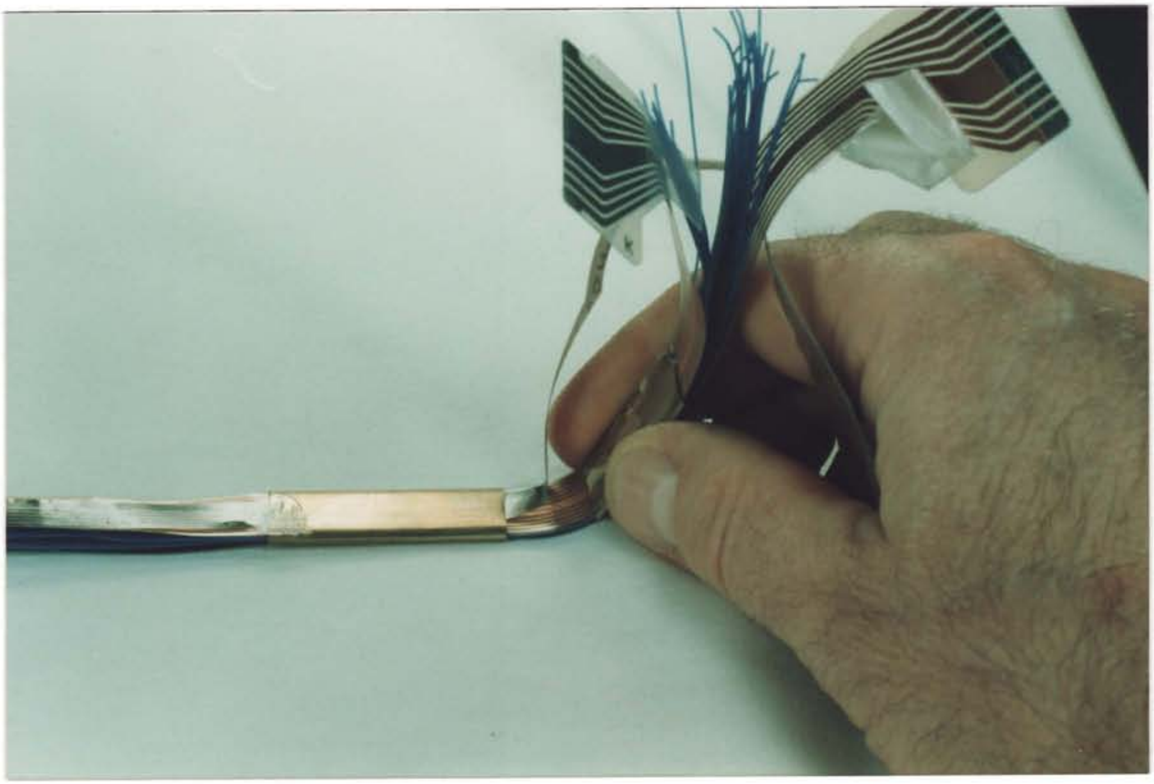

FIGURE 45: Prototype cabling scheme utilizing ribbons. Two pneumatic ribbon cables containing twenty-five 30AWG Kynar tubes were sandwiched between Kapton electrical ribbon, and the entire assembly routed through two rectangular channels. (Photo. 160595A-26)

- A very significant controller redesign effort must be undertaken to accommodate cables being routed "down" rather than "up" through the glove controller mechanism. Additionally, space must be provided on the mounting pad (on the back of the hand) to accommodate differentially-moving ribbons as they emerge from the finger channels.

- Connectorization of the tactile display may be required to allow system assembly and repair (at least one end of the ribbon cable must be unterminated to allow for insertion of the ribbon into the cable channels). This is considered to be a very difficult problem.

4.4 Tactile Display Drivers

The fabricated tactile display drivers were patterned on the units produced in Phase-I of contract NAS9-18704 ("Tactile Display of Whole Arm Manipulators"), each driver utilizing an pneumatic valve manifold containing 48 valves and an external controller card. The design of the valve module was finalized early in the program, so three drivers were fabricated to facilitate development of the tactile display and other elements of the system. Photographs of the driver module are shown in Figure 46, and the detailed mechanical drawings required for fabrication presented in Appendix F.

In a later stage of the program, an opportunity arose to take advantage of the development of an advanced PCB PWM controller circuit that was miniaturized to the degree that it could be mounted within the driver enclosure. A photograph of this PCB is shown in Figure 47, and the electrical schematics and mechanical drawings related to the PCB are presented in Appendix G (a drawing of the original wire-wrapped, external version may be found at the end of Appendix G). The advantage of this approach was that all external PWM control cards, their associated enclosure, and cables could be eliminated, allowing a simple direct connection between the D/A card in the PC controller and the driver module: see Figure 48.

It should be emphasized that, at present, the new PWM boards have not been installed in the valve modules. Additional work is needed to accomplish this, and involves machining a new front panel for each of the valve driver modules (see Figure 49) and re-terminating the valve leads into a single 64-pin IDC connector. The appearance of the completed driver modules will then resemble the 64-valve unit shown in Figure 50.

FIGURE 46: One of three driver modules fabricated for this program. Each module can drive up to 48 taxels in a PWM mode. Top and bottom connectors are the vacuum and pressure ports, respectively. This version does not have the PWM control electronics on-board, but rather relies on an external board for that function. [Photos: GC060793R1-03 (top), and -07 (bottom)]

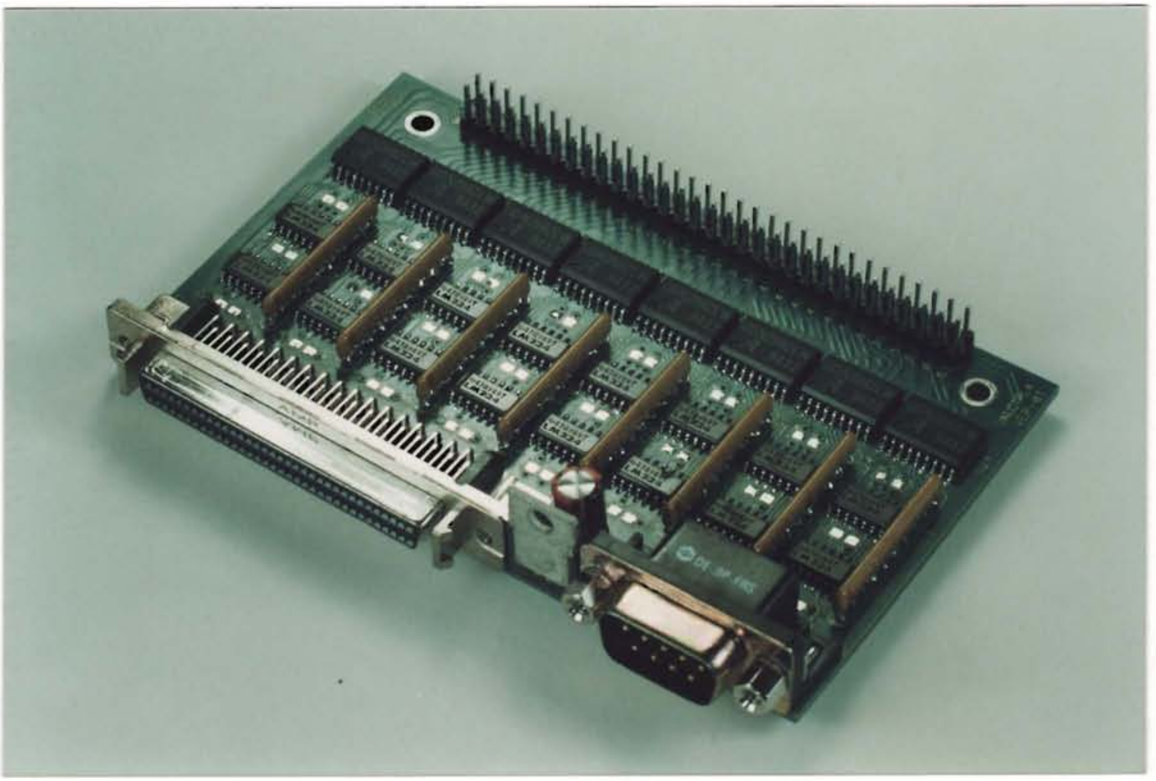

<u>FIGURE 47</u>: PCB-version of the 64-channel PWM controller and driver for the tactile display valve modules. SMT technology allowed reducing the board size by a factor of approximately 6 over the original wirewrapped design. DB-9 connector at lower-right is for +24V power and the PWM oscillator. (Photo. GC160595A-08)

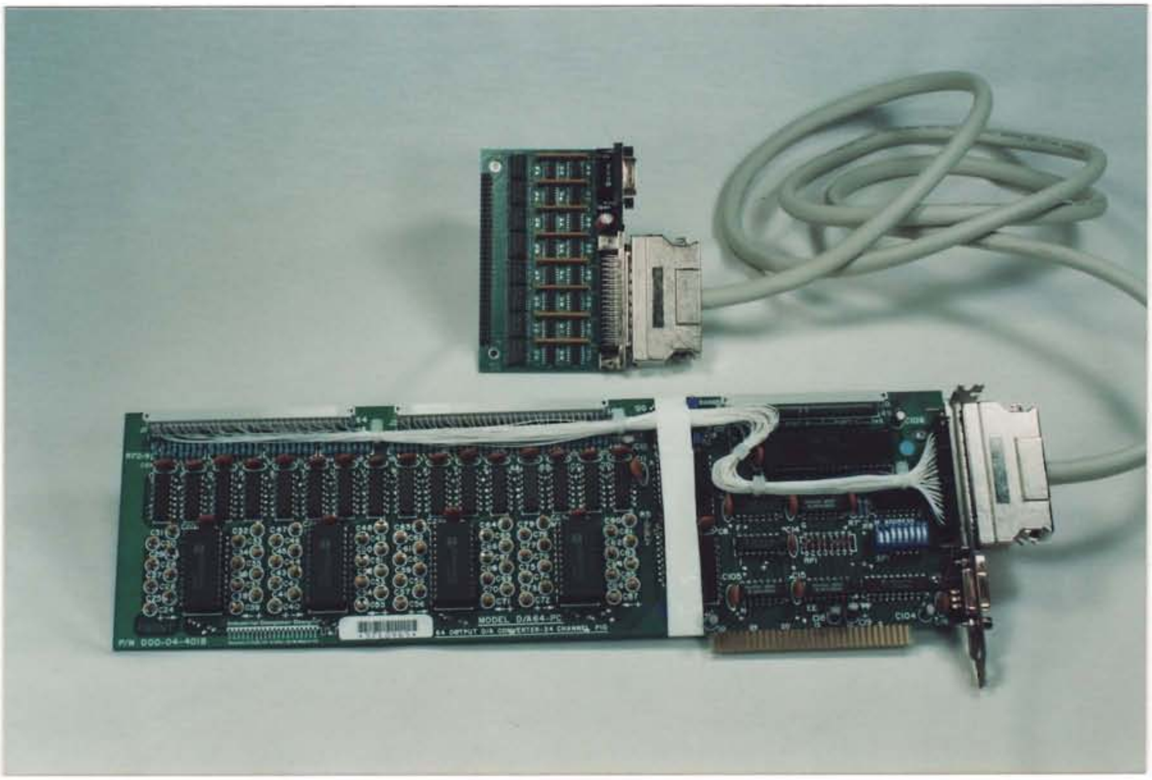

FIGURE 48: Utilization of the PCB-version of the PWM valve driver allow a direct connection between the D/A card (mounted in the PC) and the valve module. (Photo. GC170595A-18)

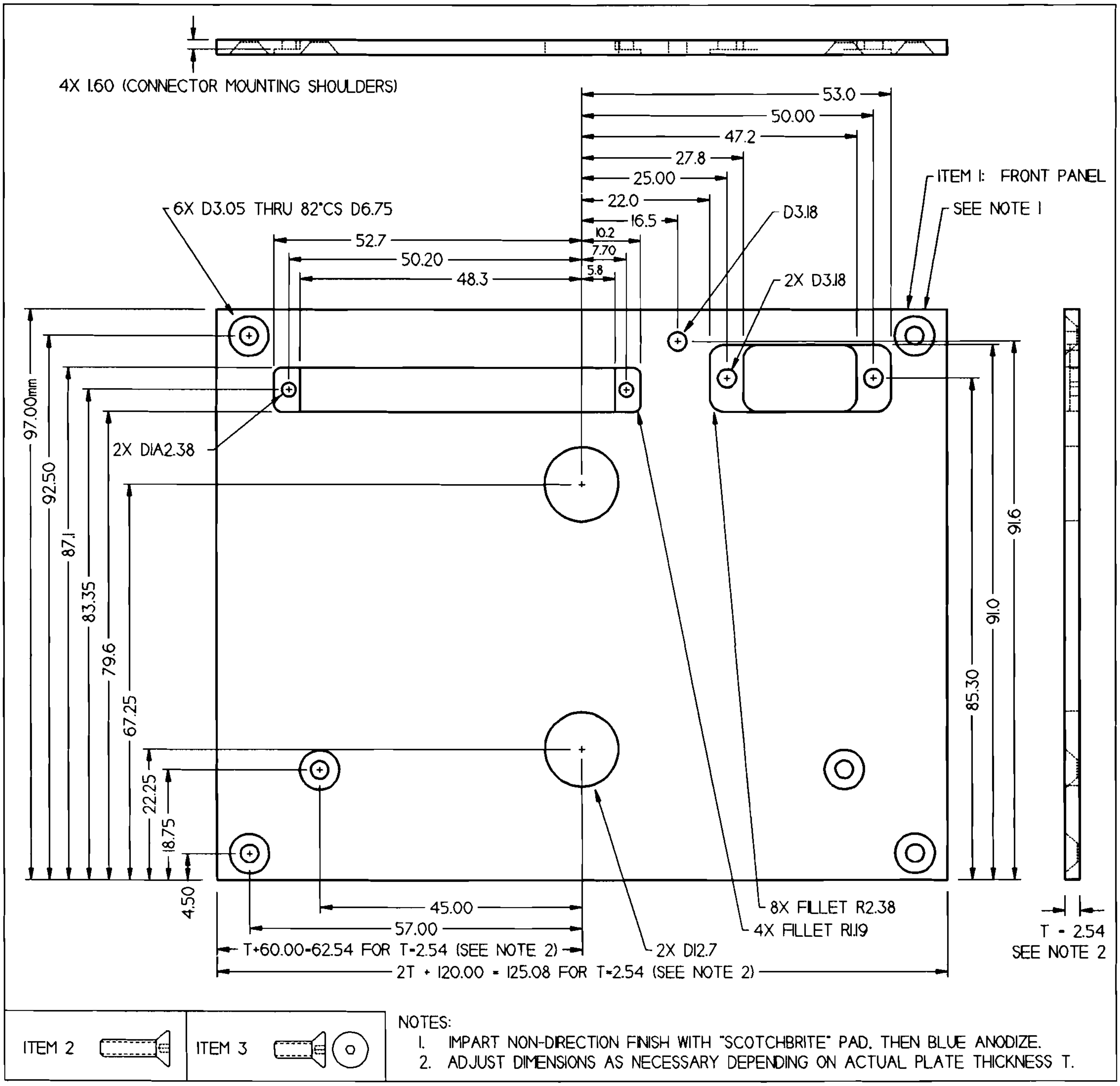

NOTES:

1. IMPART NON-DIRECTION FINISH WITH "SCOTCHBRITE" PAD. THEN BLUE ANODIZE.
2. ADJUST DIMENSIONS AS NECESSARY DEPENDING ON ACTUAL PLATE THICKNESS T.

4	TDRV3110-PRT03	ENCLOSURE FASTENER: 4-40UNC x 1/4" FLATHEAD SOCKET SCREW		3
2	TDRV3110-PRT02	ENCLOSURE FASTENER: 4-40UNC x 3/8" FLATHEAD SOCKET SCREW		2
1	TDRV3110-PRT01	FRONT PANEL	ALUMINUM. 6061-T6 2.54mm THK	1
QTY	PART/ID NO.	NOMENCLATURE OR DESCRIPTION	MATERIAL SPECIFICATION	ITEM NO.
PARTS LIST (ONE MODULE)				

FIGURE 49: Modified front enclosure plate required to mount the new PCB-version of PWM controller card within the valve enclosure. (Dwg. TDRV3110.GCD)

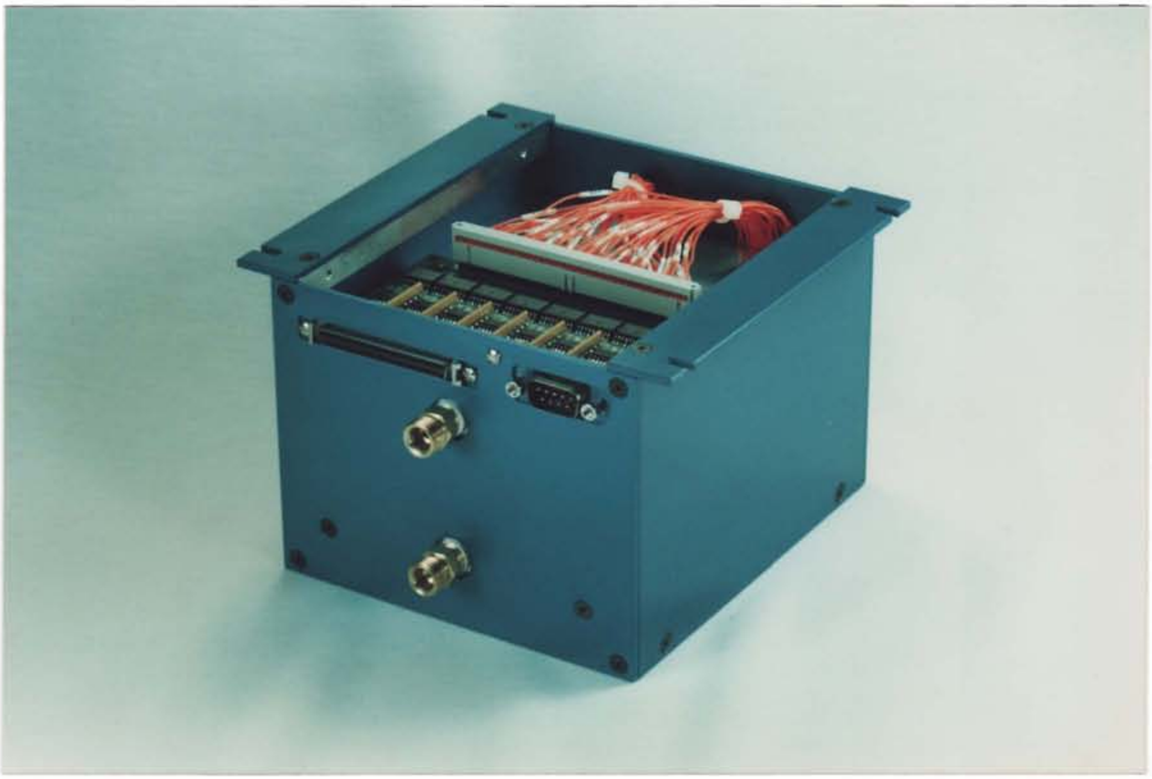

FIGURE 50: Appearance of the 48-channel glove controller driver modules after modification of the front plate and installation of PCB-version of PWM controller board will look similar to the above 64 channel driver. (Photo. GC170595A-16)

4.5 PC-Based Tactile Data Processor

A 486DX-50 industrial rackmount PC, video acquisition card, and CCD camera were acquired for this project. However, the computer system was not assembled nor the software implemented as other higher-priority tasks encountered difficulty, e.g., glove controller mechanism design, tactile sensor, and tactile display.

The functions the system was intended to perform included tactile data acquisition, signal conditioning, and calibration. The tactile sensor interface to the video system would allow for the attachment of multiple sensors (e.g., from one to ten) to the video camera by means of a special fiberoptic adapter. The software for tactile sensor data processing was to be based on code previously developed in-house under both commercial and government R&D programs. In general, it would allow for data acquisition from the video camera by means of a frame grabber card, and then process the data by correcting for the baseline illumination intensity and linearizing the response of each taxel. In addition, some form of automatic or rapid sensor calibration was to be implemented.

The issue of sensor calibration (and real-time recalibration) was an important one, and was given additional consideration. The Phase-I sensor was manually calibrated by applying various loads through an elastomeric pad to each taxel and adjusting the gain and zero offset potentiometers for each channel. This was a laborious process, and not convenient to implement in an R&D or other application. Various methods of automating the calibration procedure for the Phase-II sensor were therefore considered, the most appealing of which was simply to evacuate the inside of the sensor cover. If the vacuum tube were attached permanently (or placed nearby at a calibration station), then the sensor could be recalibrated almost in real-time by simply pulling various levels of vacuum and readjusting the appropriate gains and baselines under microprocessor control. However, despite the advantages of the approach, it was concluded that a vacuum alone (0-100kPa) could not provide the full range of pressure differentials required to fully linearize each taxel response (0-700kPa), and that the technical difficulties of creating a vacuum-tight and modular tactile sensor were significant and should wait until a first-generation modular prototype was created and tested.

An alternative approach involving the creation of a pressure cell into which each sensor could be placed (or pushed up against) was also considered, as this approach had been tried with other tactile sensors (but not the Phase-I unit) with good results. It was much faster than manual probing, and a 128-element tactile sensor device could be calibrated in approximately 15-20 minutes. However, this method relies of the tactile sensor having a smooth cylindrical geometry along its full length, so a simple O-ring sufficed to seal the sensor into the pressure cell. It was expected that a similar approach could be used for this Phase-II tactile sensor, though no specific designs for the pressure cell were made. However, the eventual need to interface with the calibration cell was maintained as an input factor in the design of the new tactile sensor and its modules.

5. CONCLUSIONS REGARDING TECHNICAL FEASIBILITY

Glove Controller:

The feasibility of the basic concept of the virtual joint was established in Phase-I and re-confirmed in Phase-II. However, the feasibility of integrating other elements of a complete glove controller (e.g., tactile display, joint torque sensing, and cable routing) into an exoskeleton with a virtual joint structure was not successfully demonstrated in this program. Significant technical difficulties regarding such elements as the complexity of the mechanism, the inaccurate torque sensor, and cable routing problems overloaded the existing 2D CAD design tools used at the inception of this project, thereby preventing their timely and cost effective solution within the original budget and time constraints of this contract. It is believed that with adequate design tools, a more realistic development schedule, and the experience derived from work that a glove controller based on the virtual joint can eventually be built.

Fingertip Tactile Sensor:

Good progress was made on the redesign of the tactile sensor into a more rugged, better performing, and more easily serviceable device. Failure to complete the redevelopment efforts was not considered an indication regarding the lack of feasibility, but was simply a consequence of the need to concentrate development effort on a high priority aspect of the program - the glove controller itself.

Fingertip Tactile Display:

Excellent progress was made in the development and successful fabrication of three 48-channel high-performance tactile display drivers. Good progress was also made in the development of new microtaxels and a flexible, conformable tactile display before postponement was caused by redeployment of R&D effort towards the glove controller mechanism.

6. DIRECTIONS for FUTURE STUDY

Glove Controller Mechanism:

- The design process can be significantly simplified and improved through utilization of an appropriate 3D CAD package that supports virtual prototyping (i.e., creation of assemblies, interference checking, and two-way annotation), and rapid creation/modification of shop drawings. Examples of such systems include Pro Engineer and ProE Jr. (Parametric Technologies), IDEAS (SDRC), and Euclid (MATRA). The present versions of AutoCAD/Designer products were determined to be inadequate in the treatment of large assemblies, interference checking, and general program stability.

- Develop a suitable interface between worm and slider gear to allow proper meshing and load transmission, e.g., separate spur and worm gears placed side by side.

- Install thrust bearings on the worm shafts to eliminate axial backlash and increase the axial load capacity.

- Explicitly combine the tactile display with the glove controller assembly so as to adequately address the mounting method, tubing distribution within the display, and cable routing pathways.

- Further explore the use of ribbons routed between the finger and controller as a means of addressing the cabling problem.

Joint Torque Sensor:

- Design and implement more accurate torque sensors, either through the incorporation of a displacement sensor on the slider drive gear, or by installation of strain sensors on a simple cantilever to extract biaxial stress information.

- Modify design to permit electrical ribbon for each torque sensor to exit from the bottom (towards the finger) rather than the top of the finger segment.

Joint Angle Encoder:

- Minimize the load on the signal processing system by developing a linearized optical filter disk, e.g., use a computer-controlled film exposure system.

- Use flat photographic film stock to prevent filter disk warpage and attendant sideplate scrubbing of the type encountered with standard 35mm film. Alternatively, explore availability of commercial filter disks made of rigid substrate materials such as glass.

- Re-evaluate the encoder design from a standpoint of manufacturability. Present design requires significant hand fitting (e.g., optimal alignment of the photoswitch with respect to the encoder disk), which drives up the cost of fabrication. In particular, the possibility of utilizing injection-molded components from plastic or metal may be an attractive option.

- Evaluate the feasibility of connectorizing the leads at the sensor, thereby significantly improving the assembly and repair procedure.

- Use a lens (or molded reflector surface) to collimate light from emitter and maximize received signal strength at detector.

- Eliminate the need for reflectors built into encoder body and the photoswitch mounting block by use of molded lightguides attached directly to photoswitch body.

Signal Conditioning:

- Implement the torque and angle data acquisition, conditioning, calibration, and processing functions in software, rather than hardware. Thus, all aspects of signal conditioning could be controlled from one source.
- Implement joint motion limit-stops in software, rather than hardware on the controller. The software limits would halt motion before hard mechanical stops take effect, thereby eliminating the problem of binding during overtravel.

Motor Driver:

- Include a motor power disconnect relay in the motor drive circuitry to avoid the problem of motor motion during system powerdown (this problem presently only occurs in the manual, or potentiometer, control mode)
- Install means of manually unbinding worm shafts in the event of an inadvertent overlimit condition.

Fingertip Tactile Sensor:

- Combine the pressure transduction membrane with the cover. One possible approach involves the use of a thin, perforated aluminum shell filled with colored silicone elastomer.
- Verify that an internal light source will provide adequate illumination without melting or seriously degrading the polycarbonate waveguide or other plastic components.
- Optimize the geometry of the waveguide to create a more uniform light distribution pattern at each taxel.
- Fabricate or locate a waveguide that involves less dimensional variability than presently obtainable. Explore the option of custom injection molded or cast waveguides to much higher tolerances.

Fingertip Tactile Display:

- Continue development of microtaxels. Evaluate various suitable candidate actuator membrane materials with regard to methods of attachment to the taxel body, compatibility with adhesives, output intensity, flex lifetime, and surface abrasion resistance.

- Interface design with glove controller with respect to pneumatic cable type, exit point(s), and mounting arrangements.

- Define a suitable flexible substrate material (e.g., silicone or urethane) for the tactile display.

- Evaluate the possibility of connectorizing the tactile display (either at the display end or driver end) to enhance repairability and compatibility with a ribbon cable design.

Tactile Display Driver:

- Complete installation of advanced PCB PWM circuit board into valve driver modules.

APPENDIX A

BLOCK, CIRCUIT, and LAYOUT DRAWINGS of the SENSOR SIGNAL CONDITIONING BOARDS

The following 10 pages contain block diagrams, circuit diagrams, and layout drawings pertaining to the sensor signal conditioning boards.

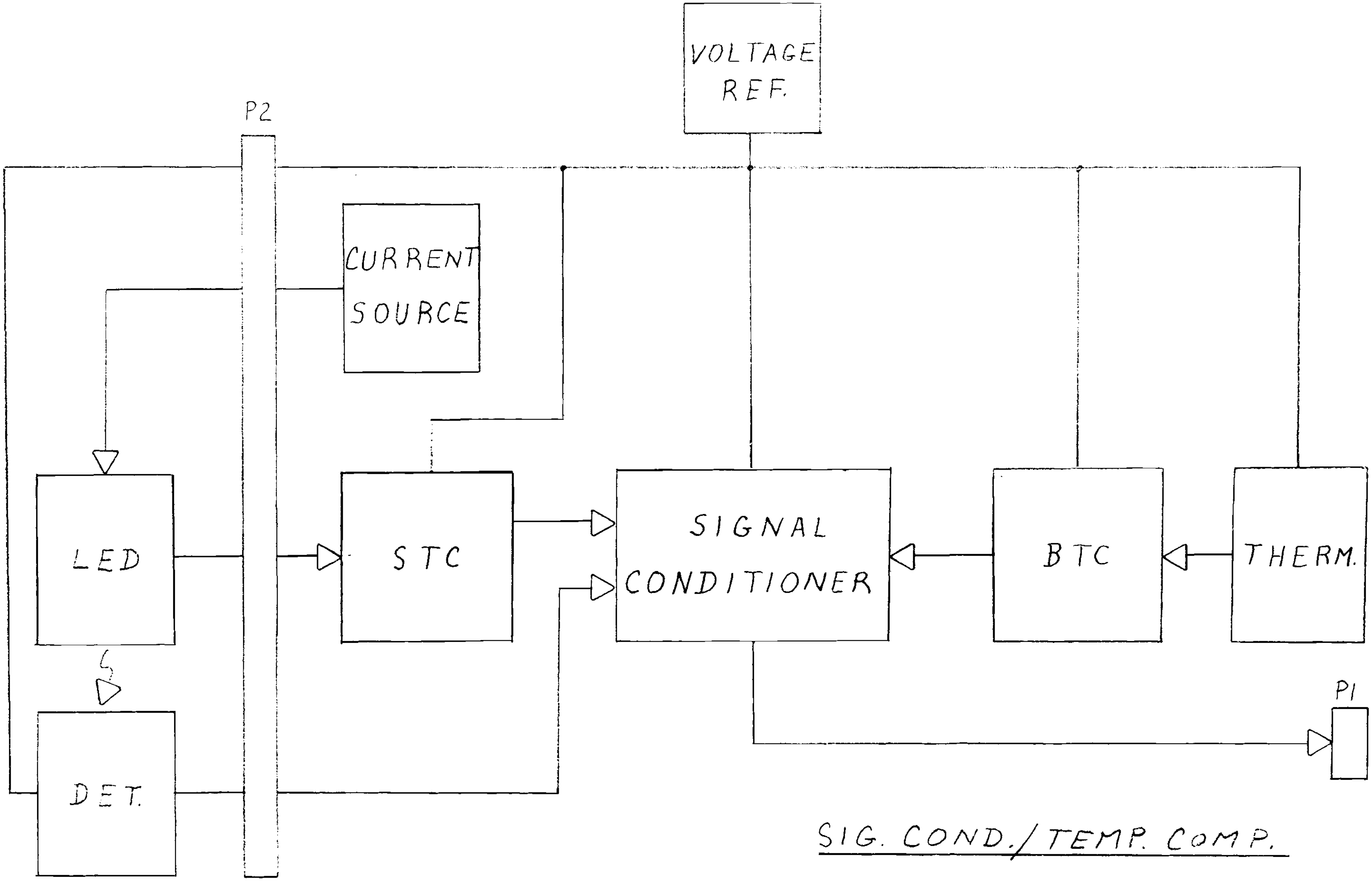

SIG. COND./TEMP. COMP.

BLOCK DIAGRAM

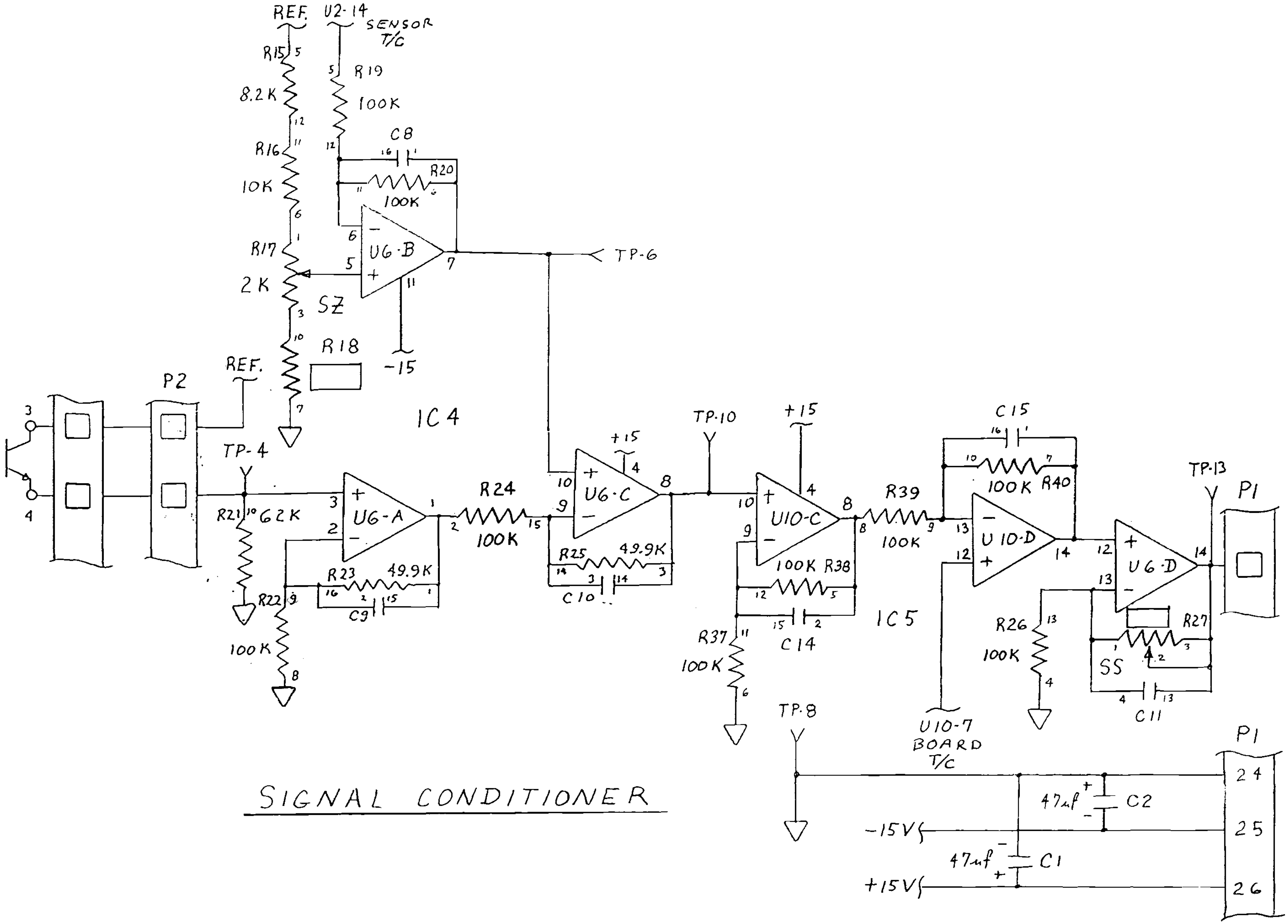

SIGNAL CONDITIONER

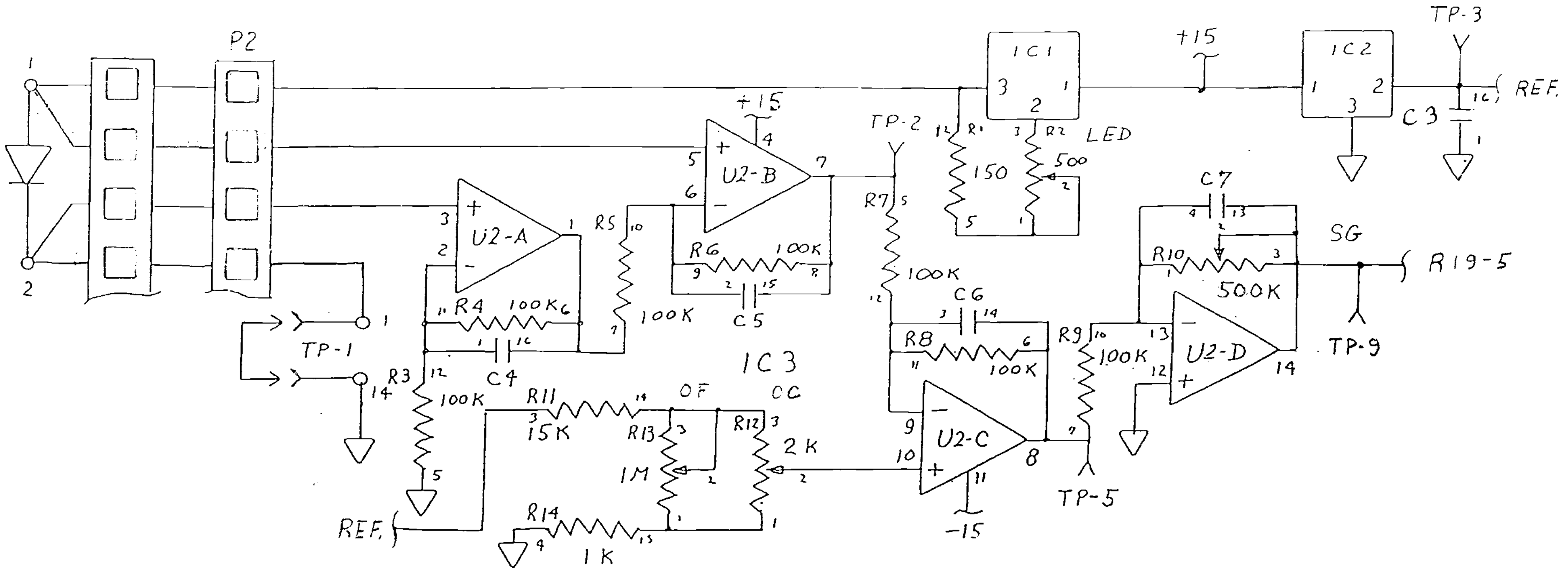

CURRENT SOURCE, VOLTAGE REFERENCE AND SENSOR TEMPERATURE COMPENSATION

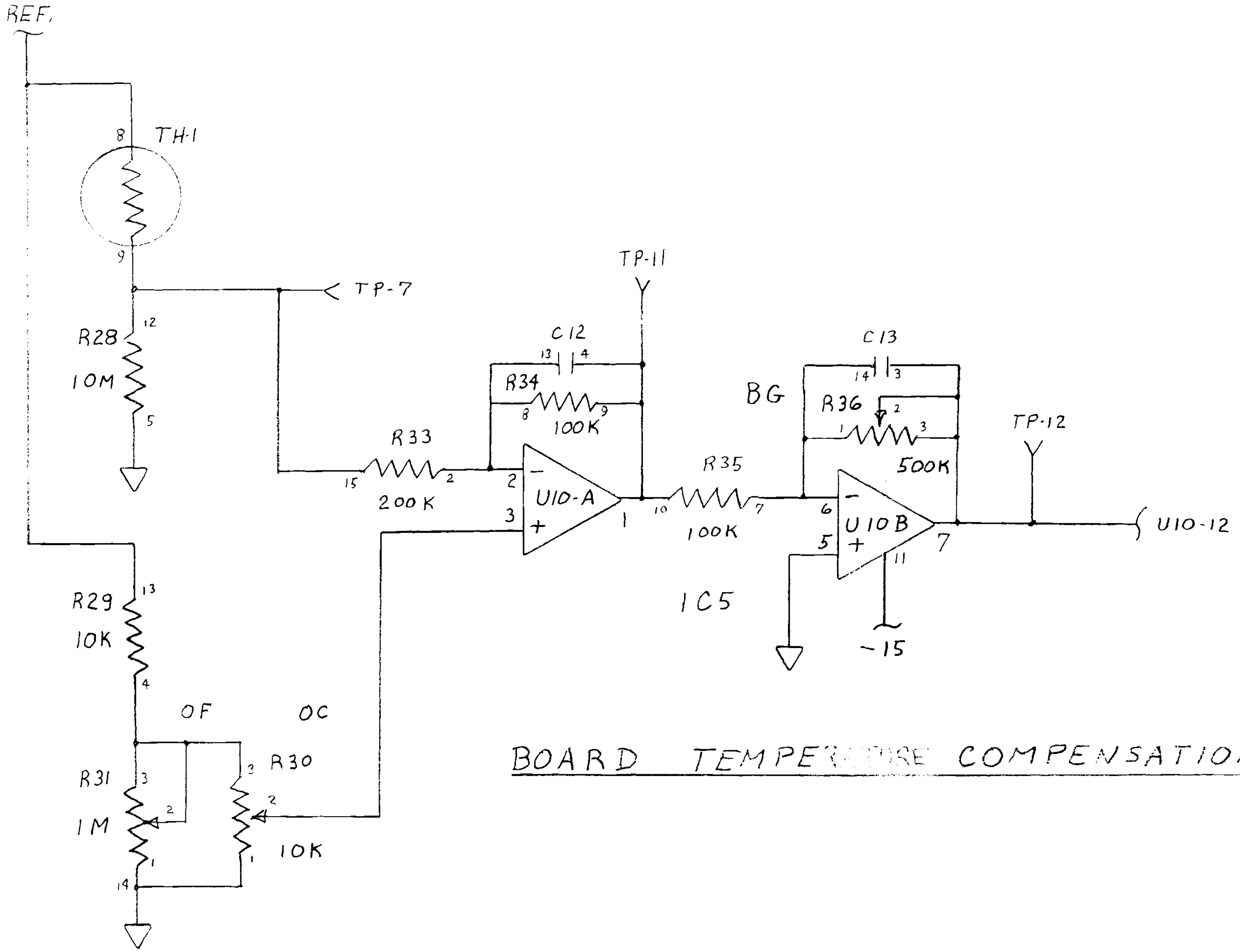

BOARD TEMPERATURE COMPENSATION

MASTER

SIGNAL CONDITIONER / TEMPERATURE COMPENSATION

BOARD LAYOUT

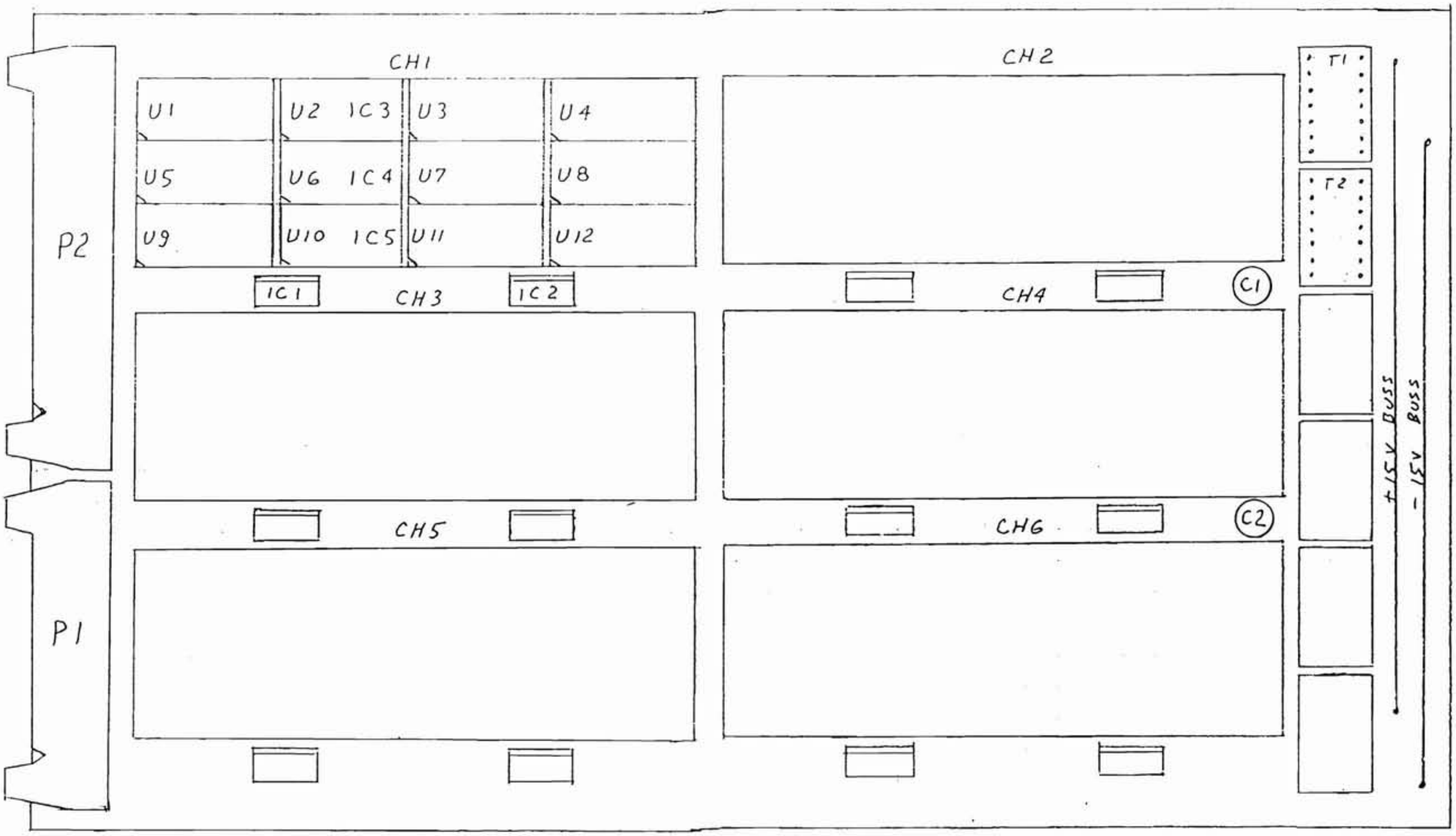

MASTER CHANNEL MODULE LAYOUT

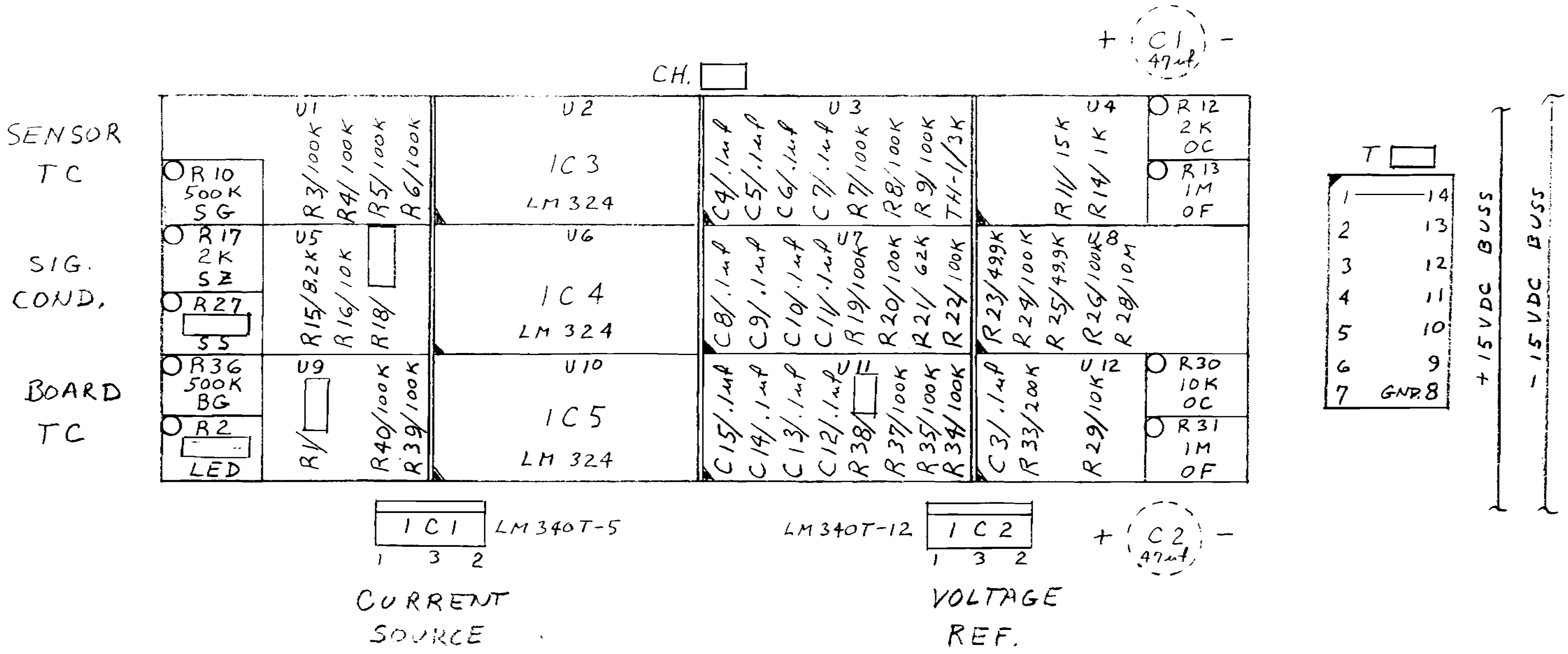

SLAVE

SIGNAL CONDITIONER / TEMPERATURE COMPENSATION

BOARD LAYOUT

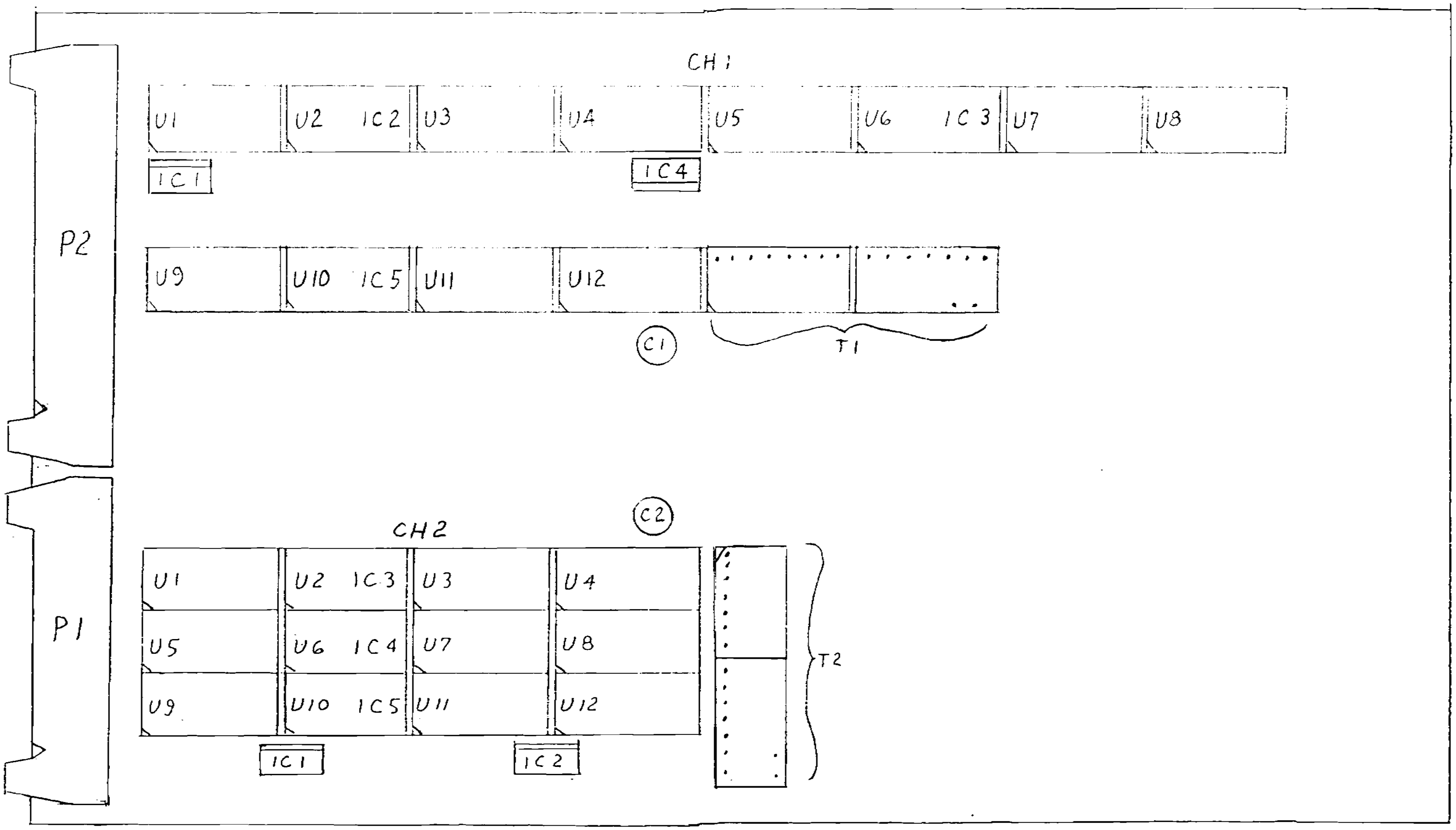

SLAVE

#1 CHANNEL MODULE

LAYOUT

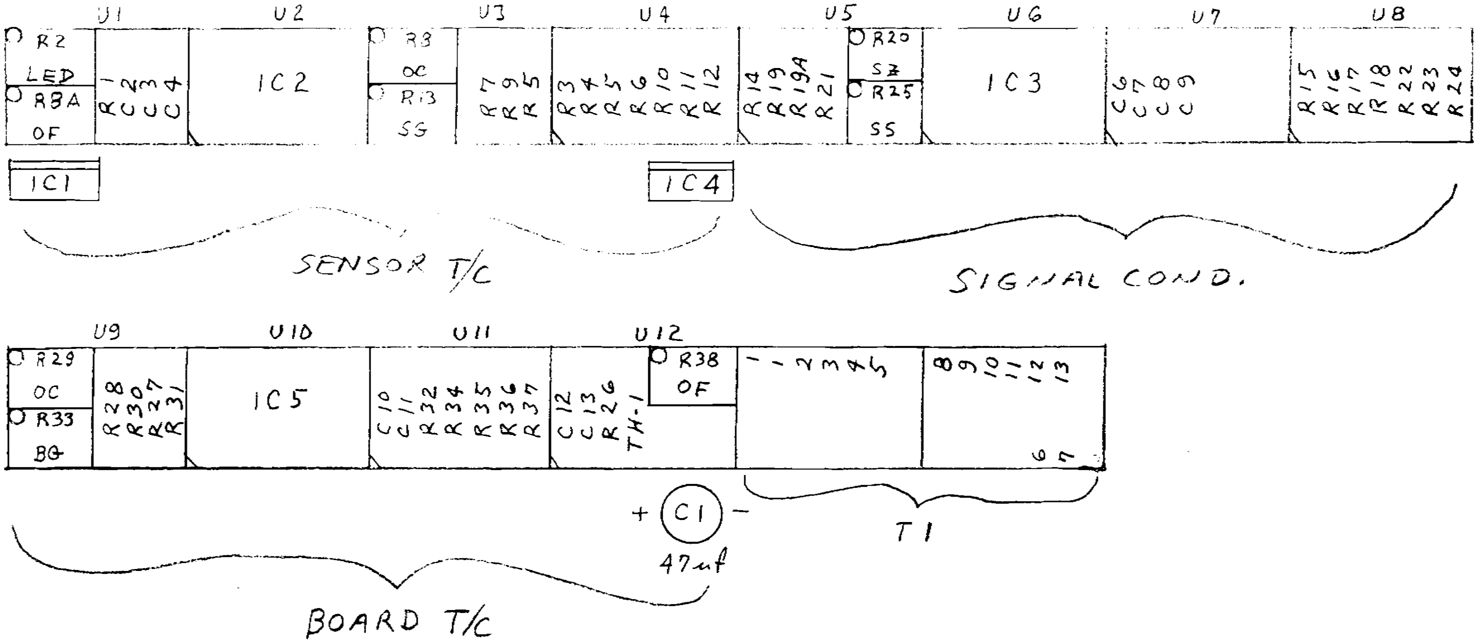

SLAVE

2 CHANNEL MODULE

LAYOUT

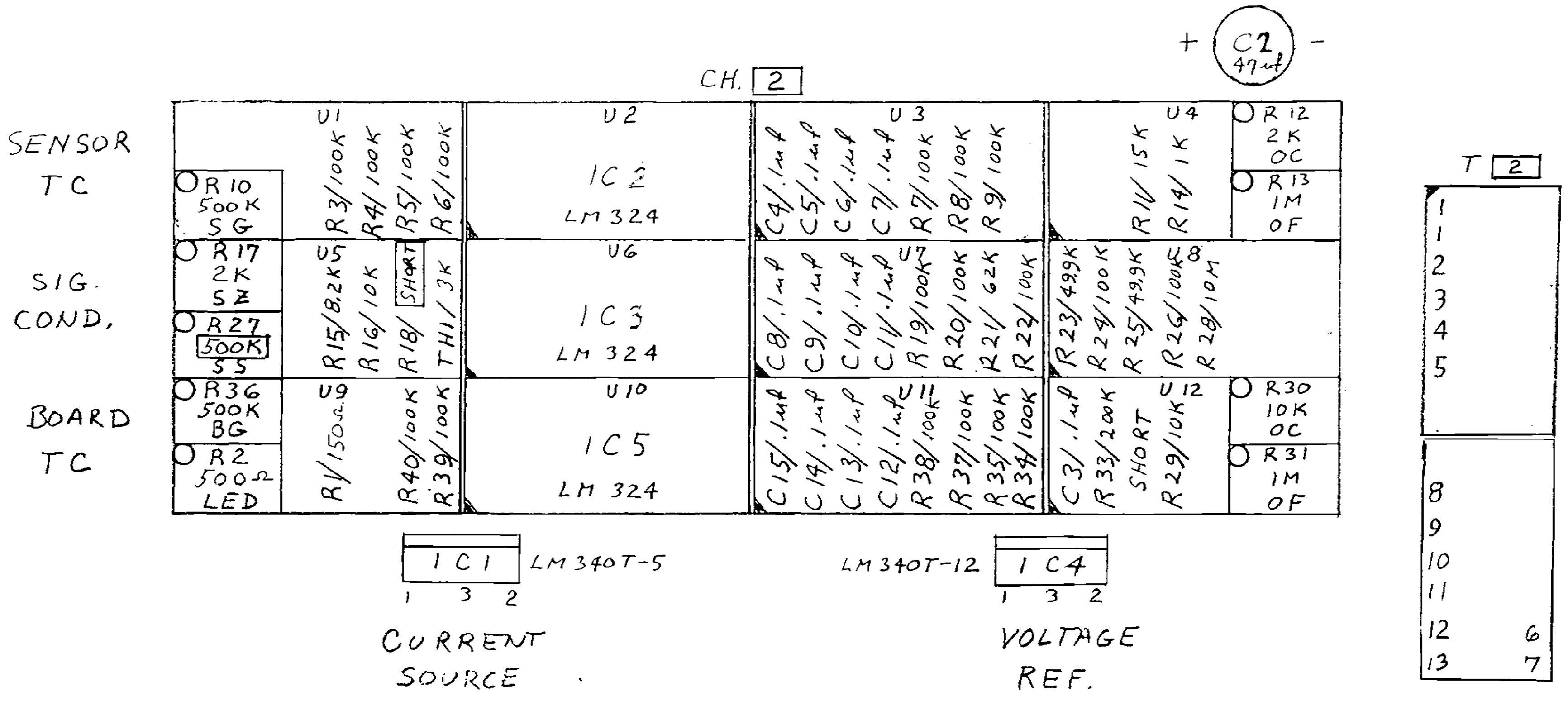

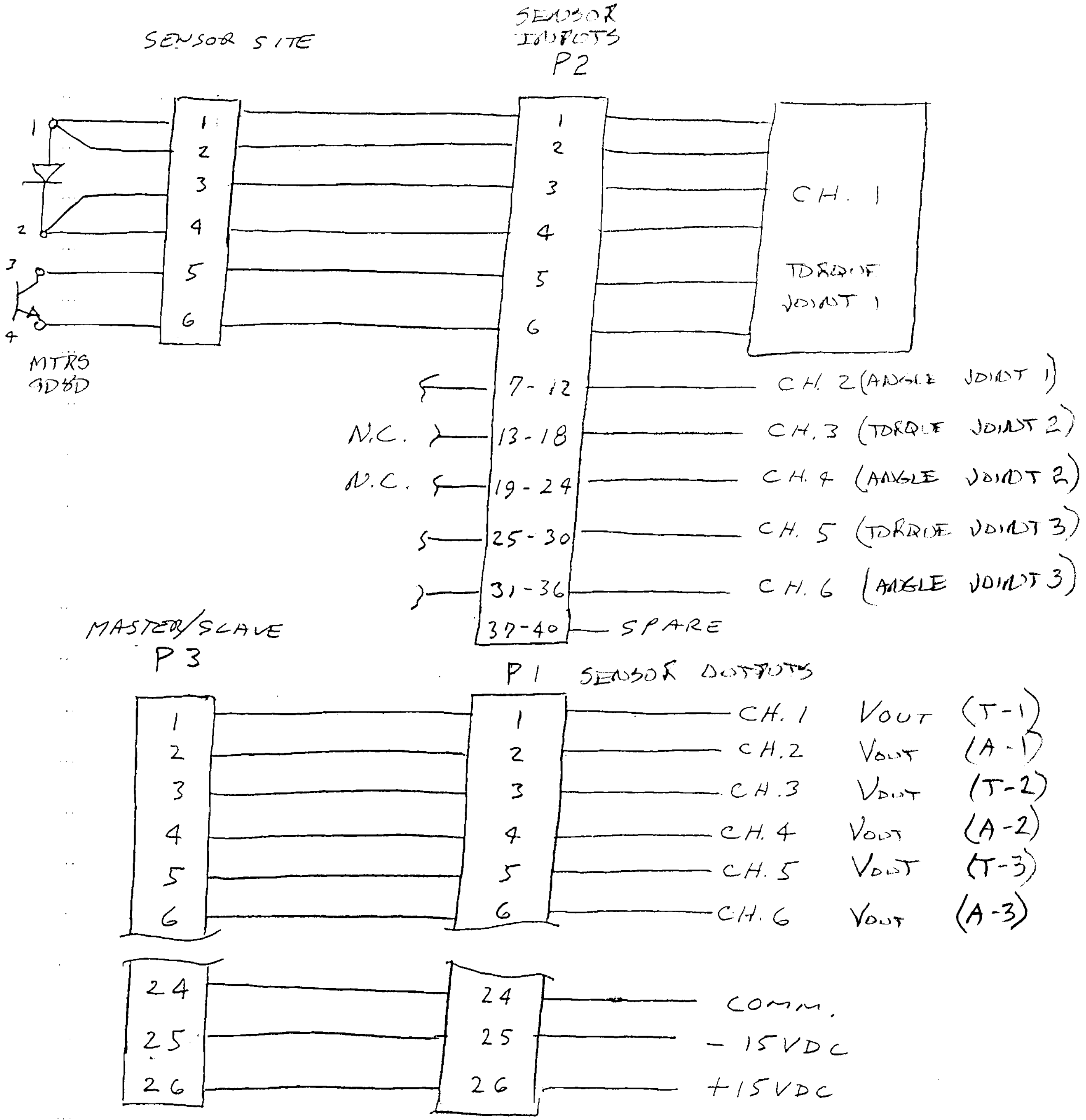

SENSOR CONNECTORS

APPENDIX B

CALIBRATION PROCEDURE for SENSOR SIGNAL CONDITIONING BOARDS

Calibration of a torque or angle sensor and the associated signal conditioning circuit is a lengthy procedure spanning several days. The following 20 pages contain copies of the calibration procedure for torque and angle sensor No. 1 on the master signal conditioning circuit board. The procedure for temperature compensation of the sensor and circuit board is identical for both types of sensors, and only the calibration procedure differs.

M1

FORCE AND JOINT ANGLE SENSOR
COMPENSATION AND CALIBRATION
PROCEDURE

File c:\wp\notebook\for_angl.sen
Revised ~~05 Dec, 1991~~
#2 13 JAN, 1992

Date: JAN. 14-16, 1991

Sensor JOINT #1 FORCE

Board : MASTER

GLOSSARY:

RT	Room Temperature
TP-03	Reference voltage +12V
TP-06	~~+15V power S-Z VOLTAGE~~
TP-07	~~-15V power THERMISTER VOLTAGE~~
TP-08	Ground
LED-I	LED current trimpot (R2)
TP-01	LED current testpoints.
TP-02	LED voltage x 2
STC	Sensor Temperature Compensation circuit
STC-O-C	STC Offset trimpot, Coarse (R12)
STC-O-F	STC Offset trimpot, Fine (R13)
TP-05	STC Offset testpoint
STC-G	STC Gain trimpot (R10)
TP-09	STC output
TP-04	Sensor voltage (direct)
S-Z	Sensor output Zero trimpot (R17)
TP-10	Sensor output after STC but prior to BTC circuit
TP-13	Sensor output after BTC circuit (to computer)
S-S	Sensor output Span trimpot (R27)
TP-06	S-Z VOLTAGE
BTC	Board Temperature Compensation circuit
BTC-O-C	BTC Offset trimpot, Coarse (R30)
BTC-O-F	BTC Offset trimpot, Fine (R31)
TP-11	BTC Offset testpoint
BTC-G	BTC Gain trimpot (R36)
TP-12	BTC output
TP-07	THERMISTOR VOLTAGE

TESTBED MOUNTING:

Mount slave or master finger on testbed (or other rigid structure) to permit preliminary calibration of angle and force sensors.

1. SET SENSOR CURRENT

Set sensor LED current (TP-01) for desired operating range with resistor R1 and trimmer R2.

Examples:

Typical force sensor current range: 8 - 14mA
Resultant sensor voltage (TP-4): 4 - 6V

Typical angle sensor current range: 30 - 45mA
Resultant sensor voltage (TP-4): 2 - 4V

Enter Operating current: 5.9 mA

2. PRELIMINARY SETTING of SENSOR ZERO and SPAN

2.1. Set output of compensators to zero to provide known starting point:

Set TP-09 to 0.0mV with STC-O-C/F and STC-G
Set TP-12 to 0.0mV with STC-O-C/F and STC-G
Set TP-13 to 0.0~~mV~~ V with S-Z

2.2. Set sensor span to appropriate range:

Force Sensor:

Desired span (TP-13) is -5 to +5V, so use S-S trimpot to adjust gain until at least one of the span rails is reached:

+F: ~0.85 Kg TP-04: 0.21 TP-13: -5.0 (-5.0V desired)
-F: ~0.3 Kg TP-04: 6.98 TP-13: 5.0 (+5.0V desired)

Angle Sensor:

Desired span (TP-13) is 0 to +5V. Use S-Z trimpot to set TP-13 to zero when finger is at 0°, and use S-S to set span so TP-13 is 5.0V when finger is at 65°:

00°: N/A TP-04: N/A TP-13: N/A (0.0V desired)
65°: N/A TP-04: N/A TP-13: N/A (5.0V desired)

M1

3. CONFIGURE SENSOR TEMPERATURE COMPENSATION CIRCUIT

3.1. Compensate for inherent amplifier offset in device U2-D and render STC output (TP-09) independent of gain (STC-G):

3.1.1. Set TP-05 to 0.0mV using coarse (STC-O-C) and fine (STC-O-F) trimpots. (Adjust coarse pot so fine pot is approximately in the center of its range.)

3.1.2. Set STC-G to zero (full CCW) and record TP-09: 0.3 mV
(TP-05 at zero)

3.1.3. Set STC-G to midpoint (approx 10 turns). TP-09: - 4.5 mV

3.1.4. Adjust STC-O-F (and STC-O-C if necessary) so that TP-09 is at the same value as at procedure step 3.1.2.

TP-05: - 1.4 mV
TP-09: 0.3 mV

3.1.5. Turn STC-G to zero (full CCW).

TP-05: -1.4 mV
TP-09: 0.3 mV

This last reading for TP-09 should be the same as that obtained in step 3.1.2., thereby indicating that the STC output has been successfully made independent of the gain stage.

3.2. Adjust gain in STC circuit to properly perform temperature compensation function, and verify operation:

3.2.1. Place sensor in oven with thermocouple touching device and not in direct air flow. Close oven and allow a few minutes for equilibration at room temperature. Leave internal fan OFF during this procedure.

3.2.2. Set TP-10 to 0.00V using S-Z.

TP-02: 2.29 V

Time	T(brd)	T(sen)	TP-04	TP-05	TP-09	TP-10
14:00	64.1 F	64.2 F	2.15 ~~mV~~ V	- 1.2 mV	0.3 mV	0.01 V

3.2.3. Turn oven ON and internal fan ON and wait approx 30 min for initial equilibration. Then turn fan OFF and wait for final equilibration. Best indicator of equilibrium is stability of TP-05.

TP-02: 2.23 V

Time	T(brd)	T(sen)	TP-04	TP-05	TP-09	TP-10
14:45	64.8 F	100.4 F	2.44 ~~mV~~ V	57.3 mV	0.3 mV	- 0.21 V

M 1

3.2.4. Adjust STC-G to make TP-10 reading the same as that in step 3.2.2, then record values:

Time	T(brd)	T(sen)	TP-04	TP-05	TP-09	TP-10
14:56	65.2F	101.1F	2.45 ~~mV~~ V	58.2 mV	-152.6 mV	0.01V

3.2.5. Turn oven off, open it up and fan-cool until equilibration at room temperature is achieved.

Time	T(brd)	T(sen)	TP-04	TP-05	TP-09	TP-10
12:30	63.4F	64.6F	2.04 ~~mV~~ V	-1.7 mV	0.9 mV	0.09V

3.2.6. Verify STC circuit operation by subjecting sensor to another temperature cycle (no trimpot adjustments). Follow above procedure for thermal equilibration and make readings at room temp, 100F, and back to room temperature:

	Time	T(brd)	T(sen)	TP-04	TP-05	TP-09	TP-10
RT	12:40	63.4 F	64.6 F	2.04 ~~mV~~ V	-1.7 mV	0.9 mV	0.09V
100F	13:08	63.9 F	101.1 F	2.41 ~~mV~~ V	56.9 mV	-149.1 mV	0.04V
RT	14:00	64.7F	65.4F	2.07 ~~mV~~ V	-0.9 mV	-1.2 mV	0.07V

3.2.7. Compute STC performance parameters:

Temp Compensation: 0.5 %

Drift (last cycle): 0.2 %

4. CONFIGURE BOARD TEMPERATURE COMPENSATION CIRCUIT

4.1. Compensate for inherent amplifier offset in device U10-B and render BTC output (TP-12) independent of gain (BTC-G):

Thermistor substitution resistor used? Y____ N_X_
(Don't use unless needed - see 4.1.3.)

4.1.1. Set TP-11 to around 0V using coarse (BTC-O-C) and fine (BTC-O-F) trimpots.
TP-11: 0.0 mV

4.1.2. Set BTC-G to zero (full CCW) and record TP-12: 0.4 mV
(TP-11 at zero)

4.1.3. Set BTC-G to midpoint (10 turns CW) TP-12: - 8.0 mV
Note: If output is too sensitive to temperature, then replace thermistor with like-valued resistor or trimpot and do procedure 4.1 again.

4.1.4. Adjust BTC-O-F (and BTC-O-C if necessary) so that TP-12 is at the same value as at procedure step 4.1.2.
TP-11: -1.5 mV
TP-12: 0.4 mV

4.1.5. Turn BTC-G to zero (full CCW).
TP-11: - 1.5 mV
TP-12: 0.4 mV

4.1.6. If a substitution resistor was used, then remove it and replace the thermistor. Adjust offset BTC-O-F so that TP-11 is the same as 4.1.4. NA: X ✓ TP-11: ____.__ mV

4.2. Adjust gain in BTC circuit to properly perform temperature compensation function, and verify operation:

4.2.1. Place board in oven. Bury thermocouple into board to shield from direct air flow. Set TP-13 to 0.00V using S-Z. Insert insulated trimpot adjustment tool into BTC-G (R36) and close oven with trimpot tool protruding through top.

4.2.2. Allow a few minutes for equilibration at room temperature. Note: leave internal fan OFF unless board will be force-cooled in actual use.

TP-07: 11.84 V

Time	T(brd)	T(sen)	TP-10	TP-11	TP-12	TP-13
09:20	69.2F	60.4F	24.N mV	-1.3 mV	0.4 mV	-0.05 V

4.2.3. Turn oven ON and fan ON and wait 30 min for initial thermal equilibration to occur. Turn fan OFF (if board is force cooled in actual use, then leave fan ON) and wait until final equilibrium occurs. The most sensitive indicator of stability is TP-11.

TP-07: 11.92 V

Time	T(brd)	T(sen)	TP-10	TP-11	TP-12	TP-13
10:06	100.2F	62.4F	72.N mV	-36.8 mV	0.3 mV	-0.14 V

4.2.4. Adjust BTC-G to make TP-13 reading the same as that in step 4.2.2, then record values:

Time	T(brd)	T(sen)	TP-10	TP-11	TP-12	TP-13
10:18	102.1F	62.8F	77.N mV	-38.2 mV	52.4 mV	-0.05V

4.2.5. Turn oven off, open it up (including underside of oven) and cool with multiple fans until equilibration at room temperature is achieved. Re-close oven and allow re-equilibration at room temperature. Leave internal fan OFF unless board is force cooled in actual use.

Time	T(brd)	T(sen)	TP-10	TP-11	TP-12	TP-13
11:00	68.6F	64.0F	12.N mV	-3.0 mV	2.8 mV	- 0.2 V

4.2.6. Verify BTC circuit operation by subjecting sensor to another temperature cycle. Follow above procedure (but omitting trimpot adjustments) for thermal equilibration and make readings at room temp, 100F, and back to room temperature:

	Time	T(brd)	T(sen)	TP-10	TP-11	TP-12	TP-13
RT	11:12	72.0F	63.9F	18.N mV	-5.7 mV	6.6 mV	- 0.02V
100F	12:00	102.4F	63.8F	73.N mV	-38.2 mV	52.5 mV	-0.04V
RT	12:47	71.7F	64.3F	11.N mV	-5.7 mV	6.7 mV	-0.01V

4.2.7. Compute BTC performance parameters:

Temp Compensation: 0.2 %

Drift (last cycle): 0.1 %

Notes for next board:

1. Mount thermistor as far as possible from adjustment pots (perhaps on the underside?)
2. Select R36 (BTC-G) to match compensation required (see TP-10)
3.
4.

M1

5. TRIM SENSOR ZERO and SPAN

5.1. Force Sensor:

5.1.1. Re-mount finger on testbed. Exercise cantilever in both directions, then set output (TP-13) to 0.00V using S-Z trimpot.

5.1.2. Apply known dead-weight loads to cantilever and set output span with trimpot S-S to +/- 5.00V (TP-13). If the response is asymmetrical, then set the most responsive defection to 5.00V and let the other direction fall where it may. Record span limits below:

+ Force: 0.869 N 0.195 lbs ====> TP-13: -3.37 V

- Force: 0.869 N 0.195 lbs ====> TP-13: 5.00 V

To convert Kg to Newton, multiply Kg by 9.807
To convert lb to Newton, multiply lb by 4.448
lb to Kg, multiply by 2.205
oz to gm, multiply by 28.34

Readjust zero (Procedure 5.1.1) if necessary at the conclusion.

5.1.3. Assess the sensor hysteresis by applying +/- fullforce loads and recording the output when the loads are removed:

After + Force, TP-13: -0.03 V
After - Force, TP-13: 0.00 V

After + Force, TP-13: -0.03 V
After - Force, TP-13: 0.01 V

After + Force, TP-13: -0.02 V
After - Force, TP-13: 0.01 V

After + Force, TP-13: -0.02 V
After - Force, TP-13: 0.01 V

After + Force, TP-13: -0.03 V
After - Force, TP-13: 0.00 V

After + Force, TP-13: -0.04 V
After - Force, TP-13: 0.00 V

Average "After + Force" output: -0.028V = Vpos
Average "After - Force" output: 0.005V = Vneg

Hysteresis = {(Vpos - Vneg) / 10} x 100%: -0.33 %

5.1.4. Calibration: Record output as a function of known input forces. Include over-range forces that exceed the both normal operating range limits by +/- 5 or 10%.

Force (LB.)	Force (N)	TF-13
0	0.0	0.00 V
-0.0225	-0.1	0.46 V
-0.045	-0.2	0.96 V
-0.0675	-0.3	1.49 V
-0.09	-0.4	2.04 V
-0.1125	-0.5	2.60 V
-0.135	-0.6	3.20 V
-0.1575	-0.7	3.81 V
-0.18	-0.8	4.43 V
-0.2025	-0.9	5.06 V
-0.225	-1.0	5.70 V
0.0	0.0	-0.03 V
0.0	0.0	0.00 V
0.0225	0.1	-0.43 V
0.045	0.2	-0.84 V
0.0675	0.3	-1.24 V
0.09	0.4	-1.61 V
0.1125	0.5	-1.98 V
0.135	0.6	-2.33 V
0.1575	0.7	-2.62 V
0.18	0.8	-2.82 V
0.2025	0.9	-2.94
0.225	1.0	-3.04
0.2475	1.1	-3.13
0.27	1.2	-3.25
0.0	0.0	-0.04

5.2. Joint Angle Sensor:

5.2.1. Mount finger on testbed or other testing jig.

N/A

5.2.2. At miniumum angle (finger straight), set output (TP-13) to 0.00V using trimpot S-Z. At maximum angle, set span with trimpot S-S to 5.00V. Verify zero. Repeat procedure if necessary. Record final values:

Min angle: ____________________ deg ====> TP-13: _____._____ V

Max angle: ____________________ deg ====> TP-13: _____._____ V

5.2.3. Assess the sensor hysteresis by approaching from the positive and negative side of the reference angle:

Reference angle: _____ deg

Approach from positive side, TP-13: _____._____ V
Approach from negative side, TP-13: _____._____ V

Approach from positive side, TP-13: _____._____ V
Approach from negative side, TP-13: _____._____ V

Approach from positive side, TP-13: _____._____ V
Approach from negative side, TP-13: _____._____ V

Approach from positive side, TP-13: _____._____ V
Approach from negative side, TP-13: _____._____ V

Approach from positive side, TP-13: _____._____ V
Approach from negative side, TP-13: _____._____ V

Average "positive side" output: _____._____ V = Vpos
Average "nagative side" output: _____._____ V = Vneg

Hysteresis = {(Vpos - Vneg) / 10} x 100%: __________ %

5.1.4. Calibration: Record output as a function of known input angles. Include some over-range data:

N/A

(a) up to 5 degrees below the minimum angle,
(b) up to 5 degrees above the maximum angle.

Angle (deg)	TP-13
	V
	V
	V
	V
	V
	V
	V
	V
	V
	V
	V
	V
	V
	V
	V
	V
	V
	V
	V
	V
	V

M2

FORCE AND JOINT ANGLE SENSOR
COMPENSATION AND CALIBRATION
PROCEDURE

file c:\wp\notebook\for_angl.sen
Revised ~~05 Dec, 1991~~
~~11~~ ~~12~~ 13 JAN, 1992

Date: JAN. 14-15, 1992

Sensor ID: JOINT #1 ANGLE

Board ID: MASTER

GLOSSARY:

RT	Room Temperature
TP-03	Reference voltage +12V
TP-06	~~+15V power~~ ~~S-Z VOLTAGE~~
TP-07	~~-15V power~~ ~~THERMISTER VOLTAGE~~
TP-08	Ground
LED-I	LED current trimpot (R2)
TP-01	LED current testpoints.
TP-02	LED voltage x 2
STC	Sensor Temperature Compensation circuit
STC-O-C	STC Offset trimpot, Coarse (R12)
STC-O-F	STC Offset trimpot, Fine (R13)
TP-05	STC Offset testpoint
STC-G	STC Gain trimpot (R10)
TP-09	STC output
TP-04	Sensor voltage (direct)
S-Z	Sensor output Zero trimpot (R17)
TP-10	Sensor output after STC but prior to BTC circuit
TP-13	Sensor output after BTC circuit (to computer)
S-S	Sensor output Span trimpot (R27)
TP-06	S-Z VOLTAGE
BTC	Board Temperature Compensation circuit
BTC-O-C	BTC Offset trimpot, Coarse (R30)
BTC-O-F	BTC Offset trimpot, Fine (R31)
TP-11	BTC Offset testpoint
BTC-G	BTC Gain trimpot (R36)
TP-12	BTC output
TP-07	THERMISTOR VOLTAGE

TESTBED MOUNTING:

Mount slave or master finger on testbed (or other rigid structure) to permit preliminary calibration of angle and force sensors.

1. SET SENSOR CURRENT

Set sensor LED current (TP-01) for desired operating range with resistor R1 and trimmer R2.

Examples:

Typical force sensor current range:	8 - 14mA
Resultant sensor voltage (TP-4):	4 - 6V
Typical angle sensor current range:	30 - 45mA
Resultant sensor voltage (TP-4):	2 - 4V

Enter Operating current: 3.5 mA

2. PRELIMINARY SETTING of SENSOR ZERO and SPAN

2.1. Set output of compensators to zero to provide known starting point:

Set TP-09 to 0.0mV with STC-O-C/F and STC-G
Set TP-12 to 0.0mV with BTC-O-C/F and BTC-G
Set TP-13 to 0.0~~mV~~ V with S-Z

2.2. Set sensor span to appropriate range:

Force Sensor:

Desired span (TP-13) is -5 to +5V, so use S-S trimpot to adjust gain until at least one of the span rails is reached:

+F: N/A TP-04: N/A TP-13: N/A (-5.0V desired)
-F: N/A TP-04: N/A TP-13: N/A (+5.0V desired)

Angle Sensor:

Desired span (TP-13) is 0 to +5V. Use S-Z trimpot to set TP-13 to zero when finger is at 0°, and use S-S to set span so TP-13 is 5.0V when finger is at ~~65°~~ 60°:

00°: 0 TP-04: 0.69 TP-13: 0.0 (0.0V desired)
60° ~~65°~~: 60 TP-04: 2.80 TP-13: 5.0 (5.0V desired)

ML

3. CONFIGURE SENSOR TEMPERATURE COMPENSATION CIRCUIT

3.1. Compensate for inherent amplifier offset in device U2-D and render STC output (TP-09) independent of gain (STC-G):

3.1.1. Set TP-05 to 0.0mV using coarse (STC-O-C) and fine (STC-O-F) trimpots. (Adjust coarse pot so fine pot is approximately in the center of its range.)

3.1.2. Set STC-G to zero (full CCW) and record TP-09: 0.9 mV (TP-05 at zero)

3.1.3. Set STC-G to midpoint (approx 10 turns). TP-09: -1.7 mV

3.1.4. Adjust STC-O-F (and STC-O-C if necessary) so that TP-09 is at the same value as at procedure step 3.1.2.

TP-05: -0.7 mV
TP-09: 0.9 mV

3.1.5. Turn STC-G to zero (full CCW).

TP-05: -0.7 mV
TP-09: 0.9 mV

This last reading for TP-09 should be the same as that obtained in step 3.1.2., thereby indicating that the STC output has been successfully made independent of the gain stage.

3.2. Adjust gain in STC circuit to properly perform temperature compensation function, and verify operation:

3.2.1. Place sensor in oven with thermocouple touching device and not in direct air flow. Close oven and allow a few minutes for equilibration at room temperature. Leave internal fan OFF during this procedure.

3.2.2. Set TP-10 to 0.00V using S-Z.

TP-02: 2.26 V

Time	T(brd)	T(sen)	TP-04	TP-05	TP-09	TP-10
10:20	62.6F	62.9F	0.70 ~~mV~~e V	-0.6 mV	0.8 mV	0.00V

3.2.3. Turn oven ON and internal fan ON and wait approx 30 min for initial equilibration. Then turn fan OFF and wait for final equilibration. Best indicator of equilibrium is stability of TP-05.

TP-02: 2.20 V

Time	T(brd)	T(sen)	TP-04	TP-05	TP-09	TP-10
11:28	63.8F	100.0 F	0.79 ~~mV~~e V	60.5 mV	0.8 mV	-0.07V

M2

3.2.4. Adjust STC-G to make TP-10 reading the same as that in step 3.2.2, then record values:

Time	T(brd)	T(sen)	TP-04	TP-05	TP-09	TP-10
11:34	64.1 F	100.6 F	0.79 ~~mV~~ V	61.9 mV	-47.3 mV	0.00V

3.2.5. Turn oven off, open it up and fan-cool until equilibration at room temperature is achieved.

Time	T(brd)	T(sen)	TP-04	TP-05	TP-09	TP-10
12:34	63.7 F	64.7 F	0.7 ~~mV~~ V	2.6 mV	-1.9 mV	0.00V

3.2.6. Verify STC circuit operation by subjecting sensor to another temperature cycle (no trimpot adjustments). Follow above procedure for thermal equilibration and make readings at room temp, 100F, and back to room temperature:

	Time	T(brd)	T(sen)	TP-04	TP-05	TP-09	TP-10
RT	12:41	63.7F	64.7 F	0.70 ~~mV~~ V	2.6 mV	-1.9 mV	0.00V
100F	13:12	64.2F	100.9 F	0.79 ~~mV~~ V	61.9 mV	-47.4 mV	0.00V
RT	14:02	65.0F	65.7 F	0.70 ~~mV~~ V	4.1 mV	-3.2 mV	0.00V

3.2.7. Compute STC performance parameters:

Temp Compensation: 0.0 %

Drift (last cycle): 0.0 %

4. CONFIGURE BOARD TEMPERATURE COMPENSATION CIRCUIT

4.1. Compensate for inherent amplifier offset in device U10-B and render BTC output (TP-12) independent of gain (BTC-G):

Thermistor substitution resistor used? Y___ N X
(Don't use unless needed - see 4.1.3.)

4.1.1. Set TP-11 to around 0V using coarse (BTC-O-C) and fine (BTC-O-F) trimpots. TP-11: 0.0 mV

4.1.2. Set BTC-G to zero (full CCW) and record TP-12: - 0.2 mV
(TP-11 at zero)

4.1.3. Set BTC-G to midpoint (10 turns CW) TP-12: - 4.5 mV
Note: If output is too sensitive to temperature, then replace thermistor with like-valued resistor or trimpot and do procedure 4.1 again.

4.1.4. Adjust BTC-O-F (and BTC-O-C if necessary) so that TP-12 is at the same value as at procedure step 4.1.2.
TP-11: - 1.6 mV
TP-12: - 0.2 mV

4.1.5. Turn BTC-G to zero (full CCW).
TP-11: - 1.7 mV
TP-12: - 0.2 mV

4.1.6. If a substitution resistor was used, then remove it and replace the thermistor. Adjust offset BTC-O-F so that TP-11 is the same as 4.1.4. NA: X TP-11: ____.____ mV

✓

4.2. Adjust gain in BTC circuit to properly perform temperature compensation function, and verify operation:

4.2.1. Place board in oven. Bury thermocouple into board to shield from direct air flow. Set TP-13 to 0.00V using S-Z. Insert insulated trimpot adjustment tool into BTC-G (R36) and close oven with trimpot tool protruding through top.

4.2.2. Allow a few minutes for equilibration at room temperature. Note: leave internal fan OFF unless board will be force-cooled in actual use.

TP-07: 11.79 V

Time	T(brd)	T(sen)	TP-10	TP-11	TP-12	TP-13
09:21	69.8 F	60.5 F	13. N mV	-9.1 mV	0.1 mV	-0.04V

4.2.3. Turn oven ON and fan ON and wait 30 min for initial thermal equilibration to occur. Turn fan OFF (if board is force cooled in actual use, then leave fan ON) and wait until final equilibrium occurs. The most sensitive indicator of stability is TP-11.

TP-07: 11.87 V

Time	T(brd)	T(sen)	TP-10	TP-11	TP-12	TP-13
10:08	100.7F	62.4F	49.N mV	-36.8 mV	0.2 mV	- 0.15 V

4.2.4. Adjust BTC-G to make TP-13 reading the same as that in step 4.2.2, then record values:

Time	T(brd)	T(sen)	TP-10	TP-11	TP-12	TP-13
10:25	102.0 F	63.1 F	51. N mV	-37.5 mV	27.5 mV	- 0.04 V

4.2.5. Turn oven off, open it up (including underside of oven) and cool with multiple fans until equilibration at room temperature is achieved. Re-close oven and allow re-equilibration at room temperature. Leave internal fan OFF unless board is force cooled in actual use.

Time	T(brd)	T(sen)	TP-10	TP-11	TP-12	TP-13
11 :08	70.3 F	64.1 F	10. N mV	-10.7 mV	7.5 mV	0.00 V

4.2.6. Verify BTC circuit operation by subjecting sensor to another temperature cycle. Follow above procedure (but omitting trimpot adjustments) for thermal equilibration and make readings at room temp, 100F, and back to room temperature:

	Time	T(brd)	T(sen)	TP-10	TP-11	TP-12	TP-13
RT	11:14	72.4 F	63.9 F	14. N mV	- 14.3 mV	10.0 mV	0.00 V
100F	12:03	102.6 F	63.9 F	50. N mV	-37.5 mV	27.5 mV	- 0.04 V
RT	12:48	72.6 F	64.3 F	10.3 mV	-11.3 mV	7.9 mV	0.00 V

4.2.7. Compute BTC performance parameters:

Temp Compensation: 0.4 %

Drift (last cycle): 0.0 %

Notes for next board:

1. Mount thermistor as far as possible from adjustment pots (perhaps on the underside?)
2. Select R36 (BTC-G) to match compensation required (see TP-10)
3.
4.

M2

5. TRIM SENSOR ZERO and SPAN

5.1. Force Sensor:

5.1.1. Re-mount finger on testbed. Exercise cantilever in both directions, then set output (TP-13) to 0.00V using S-Z trimpot.

5.1.2. Apply known dead-weight loads to cantilever and set output span with trimpot S-S to +/- 5.00V (TP-13). If the response is asymmetrical, then set the most responsive defection to 5.00V and let the other direction fall where it may. Record span limits below:

N/A

+ Force: ________ N ________ lbs ====> TP-13: ____.____ V

- Force: ________ N ________ lbs ====> TP-13: ____.____ V

To convert Kg to Newton, multiply Kg by 9.807
To convert lb to Newton, multiply lb by 4.448
lb to Kg, multiply by 2.205
oz to gm, multiply by 28.34

Readjust zero (Procedure 5.1.1) if necessary at the conclusion.

5.1.3. Assess the sensor hysteresis by applying +/- fullforce loads and recording the output when the loads are removed:

After + Force, TP-13: ____.____ V
After - Force, TP-13: ____.____ V

After + Force, TP-13: ____.____ V
After - Force, TP-13: ____.____ V

After + Force, TP-13: ____.____ V
After - Force, TP-13: ____.____ V

After + Force, TP-13: ____.____ V
After - Force, TP-13: ____.____ V

After + Force, TP-13: ____.____ V
After - Force, TP-13: ____.____ V

After + Force, TP-13: ____.____ V
After - Force, TP-13: ____.____ V

Average "After + Force" output: ____.____ V = Vpos
Average "After - Force" output: ____.____ V = Vneg

Hysteresis = {(Vpos - Vneg) / 10} x 100%: ________ %

N/A

5.1.4. Calibration: Record output as a function of known input forces. Include over-range forces that exceed the both normal operating range limits by +/- 5 or 10%.

Force ( )	Force (N)	TP-13
		V
		V
		V
		V
		V
		V
		V
		V
		V
		V
		V
		V
		V
		V
		V
		V
		V
		V
		V
		V
		V

M2

5.2. Joint Angle Sensor:

5.1.1. Mount finger on testbed or other testing jig.

5.1.2. At miniumum angle (finger straight), set output (TP-13) to 0.00V using trimpot S-Z. At maximum angle, set span with trimpot S-S to 5.00V. Verify zero. Repeat procedure if necessary. Record final values:

Min angle: 0 deg ====> TP-13: 0.00 V

Max angle: 60 deg ====> TP-13: 5.00 V

5.1.3. Assess the sensor hysteresis by approaching from the positive and negative side of the reference angle:

Reference angle: 30 deg

Approach from positive side, TP-13: 0.90 V
Approach from negative side, TP-13: 0.90 V

Approach from positive side, TP-13: 0.91 V
Approach from negative side, TP-13: 0.91 V

Approach from positive side, TP-13: 0.91 V
Approach from negative side, TP-13: 0.91 V

Approach from positive side, TP-13: 0.90 V
Approach from negative side, TP-13: 0.91 V

Approach from positive side, TP-13: 0.92 V
Approach from negative side, TP-13: 0.92 V

Average "positive side" output: 0.908V = Vpos
Average "nagative side" output: 0.91 V = Vneg

Hysteresis = {(Vpos - Vneg) / 10} x 100%: -0,02 %

5.1.4. Calibration: Record output as a function of known input angles. Include some over-range data:

(a) up to 5 degrees below the minimum angle,

(b) up to 5 degrees above the maximum angle.

Angle (deg)	TP-13
-2	-0.06 V
0	0.00 V
10	0.20 V
20	0.43 V
30	0.89 V
40	1.65 V
50	2.85 V
60	4.98 V
	V
	V
	V
	V
	V
	V
	V
	V
	V
	V
	V
	V
	V

APPENDIX C

OPERATION INSTRUCTIONS for SINGLE FINGER CONTROLLER and TACTILE TELEPRESENCE SYSTEM

C.1 Single-Finger Glove Controller Prototype

Note that the top of both enclosures must be removed to access either the glove control protoboard area or the sensor calibration potentiometers, so rack mounting is not initially recommended. The following items describe how to use the system, and describe its capabilities and limitations:

- On POWER-UP, manually hold the finger to prevent initial joint angle excursions from jamming the joint at one extreme of travel. Maintain manual restraint until the circuit stabilizes after a few second, then release. If stable behavior is not achieved within 30 seconds, adjust the pertinent force ZERO adjustment pot ("SZ") on the sensor signal conditioning board.

- The torque sensor output voltages have been set to range from approximately -5 to +5V, whereas the angle sensor output ranges from 0 - 5V (where 0 represents a straight finger joint). Additionally, the motors respond to control voltages applied to pins MM1, MM2, MM3, and SM1 on the prototype board (located within the Master/Slave Interface enclosure) ranging from -5 to +5 volts. The motors may be driven in two modes, the first being a simple analog power-amplifier mode in which the motor voltage ranges from -12 to +12V, and the second being the PWM mode (1000Hz fundamental frequency). As shipped, all motors are operating in the analog drive mode. The PWM mode was found to be somewhat helpful in overcoming stiction at low drive levels. The drive modes are easily changed by shifting a jumper on each motor drive board.

- Note that the torque and angle sensor for the master joint 2 are absent, as they were removed in the course of development and installed on the slave joint.

- The range of lateral finger motion at the main knuckle is approximately 35 degrees and covers -5 to +30 degrees (where the plus direction corresponds to spread fingers). The -/+ values may be adjusted by loosening the setscrew in the middle of the encoder and utilizing trial and error to obtain the desired values, e.g., repetitively loosen, jiggle the joint, and retighten the encoder. The magnitude of the range is fixed by the six-segment encoder disc, and cannot be changed without changing the disc.

- The simplest mode of motor control is DIRECT. This is accomplished by connecting the leads on the prototyping board from the motor control potentiometers directly to the motor control pins, as indicated below:

Potentiometer	Motor
MP1	MM1
MP2	MM2
MP3	MM3
SP1	SM1

  The potentiometers provide a +/- 5V control signal capable of driving the master or slave motors in either direction at speeds from zero to the maximum. The direction of joint motion corresponds to the knob rotation direction on each pot. Care should be taken when approaching the hard travel limits, as the joints can bind so tightly that simple reversal of the motor will not free it.

- Should a joint bind (e.g., due to a high-speed encounter with a hard mechanical stop), the joint can be freed by using a sharp scribe or other pointed implement to access and turn the worm shaft backwards. Should access be precluded, then partial disassembly involving removal of one side plate may be required.

- The other simple mode of master or slave control is open-loop control of the motor with the torque sensor. In the torque-feedback mode, the joint moves compliantly with regard to any applied force/torque to the finger joints. It may be implemented by removing the manual control potentiometer connections to MM1, MM3, and SM1, and making the following connections instead:

<u>Sensor</u>	<u>Motor</u>
MT1	MM1
MP2	MM2
MT3	MM3
ST1	SM1

This connects the torque sensor output (+/- 5 V output span) to the corresponding joint motor (+/- 5V input control range). Drift in the sensors and sensor signal conditioning boards is significant during warmup, so approximately 10-15 minutes should be allowed after turn-on for the system to stabilize. If the sensors are not nulled out at that time (as indicated by a zero voltage output), then the zero level should be adjusted at the "SZ" pot in the appropriate sensor signal conditioning circuit section.

- Due to the non-linear nature of the conditioned sensor signals, no provisions have been made for master/slave control at this time (only master <u>or</u> slave)

- Use care to insure that only one source is being use to drive each motor, as simultaneous sources (e.g., torque sensor output and manual control potentiometer) may result in unpredictable behavior and/or damage to the signal conditioning boards.

C.2 Fingertip Tactile Telepresence System Prototype

It has been determined that the latex display elements in the fingertip-shaped tactile display device have deteriorated significantly since their date of manufacture 7 years ago, and that activation under the original design operating pressure will result in rapid destruction by over-inflation. Approximately 4 taxels out of 37 were destroyed before this problem was recognized, and 3 additional units destroyed in the course of determining a new safe pressure of 70kPa/10psi. At this reduced pressure, the tactile stimulation provided by the elements is significantly weaker than experienced at the original operating pressure of 240kPa/35psi, though readily discernible under conditions involving light finger pressure against the tactile display.

The level of tactile stimulation may be increased by increasing the taxel operating pressure. This is accomplished by removing the cover from the TACTILE SENSOR/DISPLAY INTERFACE enclosure and re-adjusting the pressure regulator. However, this is expected to cause additional taxels to fail by ballooning. (Note that once a taxel has ballooned, its threshold for that mode of failure will be significantly decreased, and for all practical purposes the taxel can be considered irreparably damaged and useless.) The Phase-I tactile display was designed and fabricated with the intent of proving the feasibility of the concept, with minimal regard given to serviceability. As such, the tactile display was a fabricated as an integral unit not designed for servicing, and therefore not repairable without a level of effort equivalent to fabricating a new display.

The system was shipped ready for operation: see Section 4.5 of Phase-I report for re-calibration instructions, if needed. The following steps are required to use the system:

- Set illuminator output control to lowest setting, and turn ON.

- Attach air supply (note limits on airline). Operating pressure is preset by an internal regulator to 70kPa (10psi).

- Turn main switch ON.

- Adjust illuminator intensity to just below the threshold for turning any of the taxels ON (use the sound of the driver valves or the visual LED display as an indicator of tactile display activity).

- The system is ready for use.

APPENDIX D

MECHANICAL DRAWINGS of THUMB-JOINT COMPONENTS

The following 26 pages contain detailed mechanical drawings describing various the components that comprise the thumb joint of the proposed glove controller described in Figures 24 to 27. The drawings are current but do not describe a complete working device, as additional design work must be performed to achieve that state.

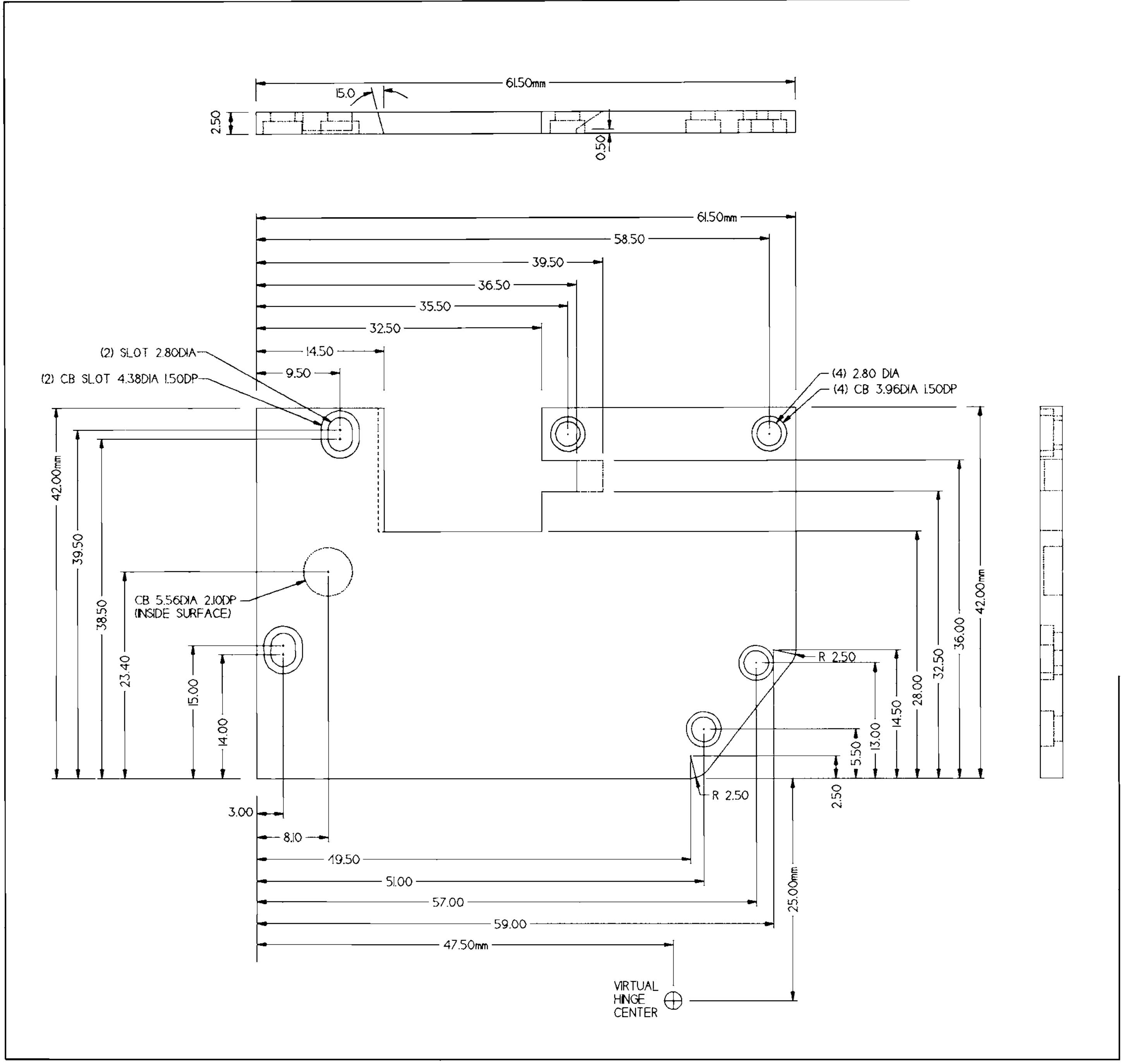

QTY	PART/ID NO.	NOMENCLATURE OR DESCRIPTION	MATERIAL SPECIFICATION	ITEM NO.
PARTS LIST				

DISTRIBUTION STATEMENT: CONFIDENTIAL AND PROPRIETARY INFORMATION. NOT FOR PUBLIC RELEASE. RESTRICTED DISTRIBUTION.

METRIC
THIRD ANGLE PROJECTION

TOL: X ±0.1 mm
X.X ±0.05mm
X.XX ±0.02mm

CONTRACT NO.
NA9-18558
PH-2 GLOVE CONTR.

BEGEJ CORPORATION

5 CLARET ASH ROAD
LITTLETON, CO 80127
TEL/FAX: (303) 932-2186

APPROVALS	DATE
FINAL:	

TITLE
LEFT SIDEPLATE FOR THUMB

SIZE:
DWG. NO. GLOVE019.GCD
REV. 31 DEC 92
SCALE: 1.5X
LAYER: 019
SHEET: 1 OF 2

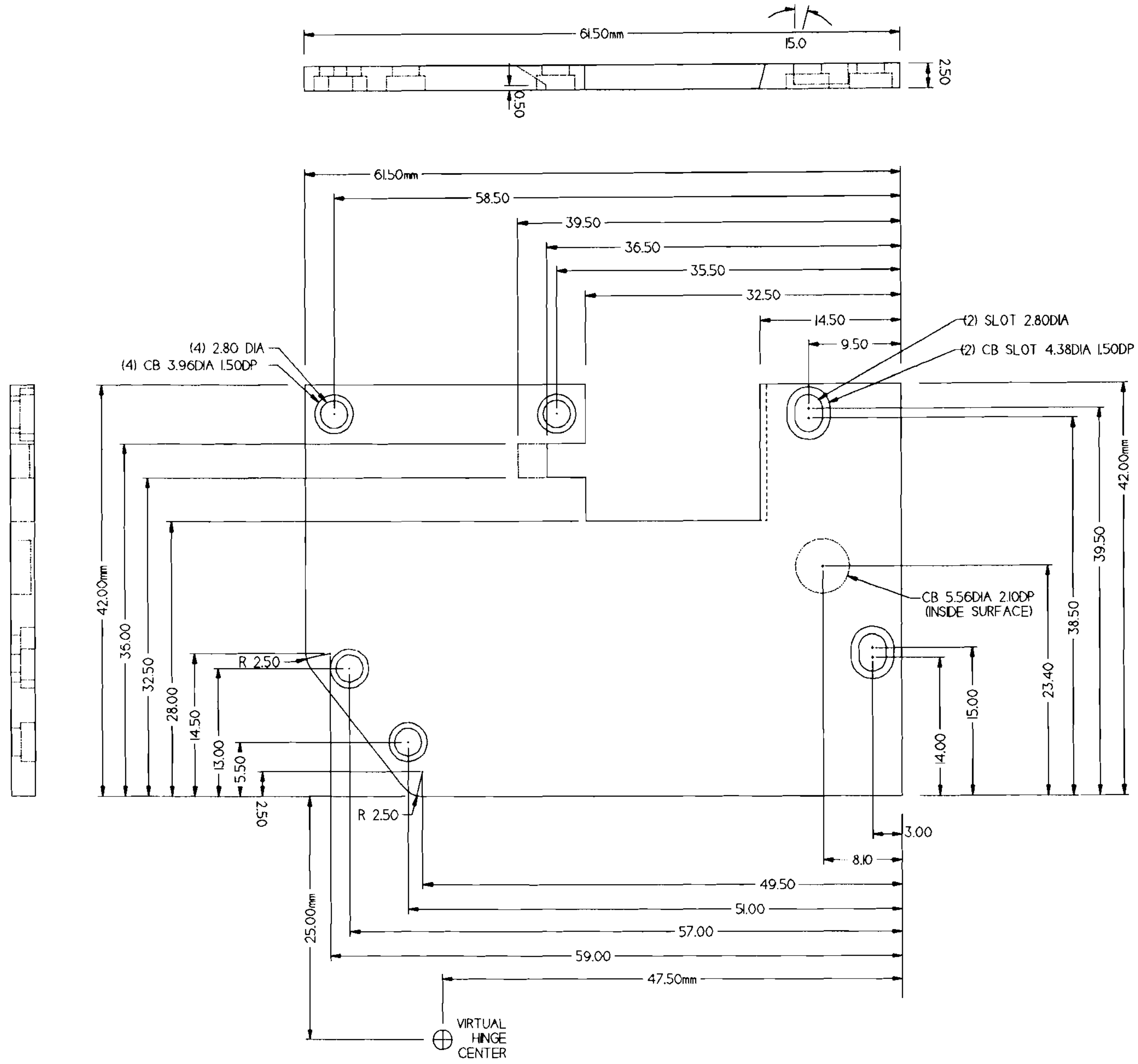

QTY	PART/ID NO.	NOMENCLATURE OR DESCRIPTION	MATERIAL SPECIFICATION	ITEM NO.
PARTS LIST				

DISTRIBUTION STATEMENT: CONFIDENTIAL AND PROPRIETARY INFORMATION. NOT FOR PUBLIC RELEASE. RESTRICTED DISTRIBUTION.

METRIC

THIRD ANGLE PROJECTION

TOL:
X ±0.1 mm
X.X ±0.05mm
X.XX ±0.02mm

CONTRACT NO.
NA9-18558
PH-2 GLOVE CONTR.

BEGEJ CORPORATION

5 CLARET ASH ROAD
LITTLETON, CO 80127
TEL/FAX: (303) 932-2186

APPROVALS	DATE
FINAL:	

TITLE
RIGHT SIDEPLATE FOR THUMB

SIZE:
DWG. NO. GLOVE019.GCD
REV. 31 DEC 92
SCALE:
LAYER: 019
SHEET: 2 OF 2

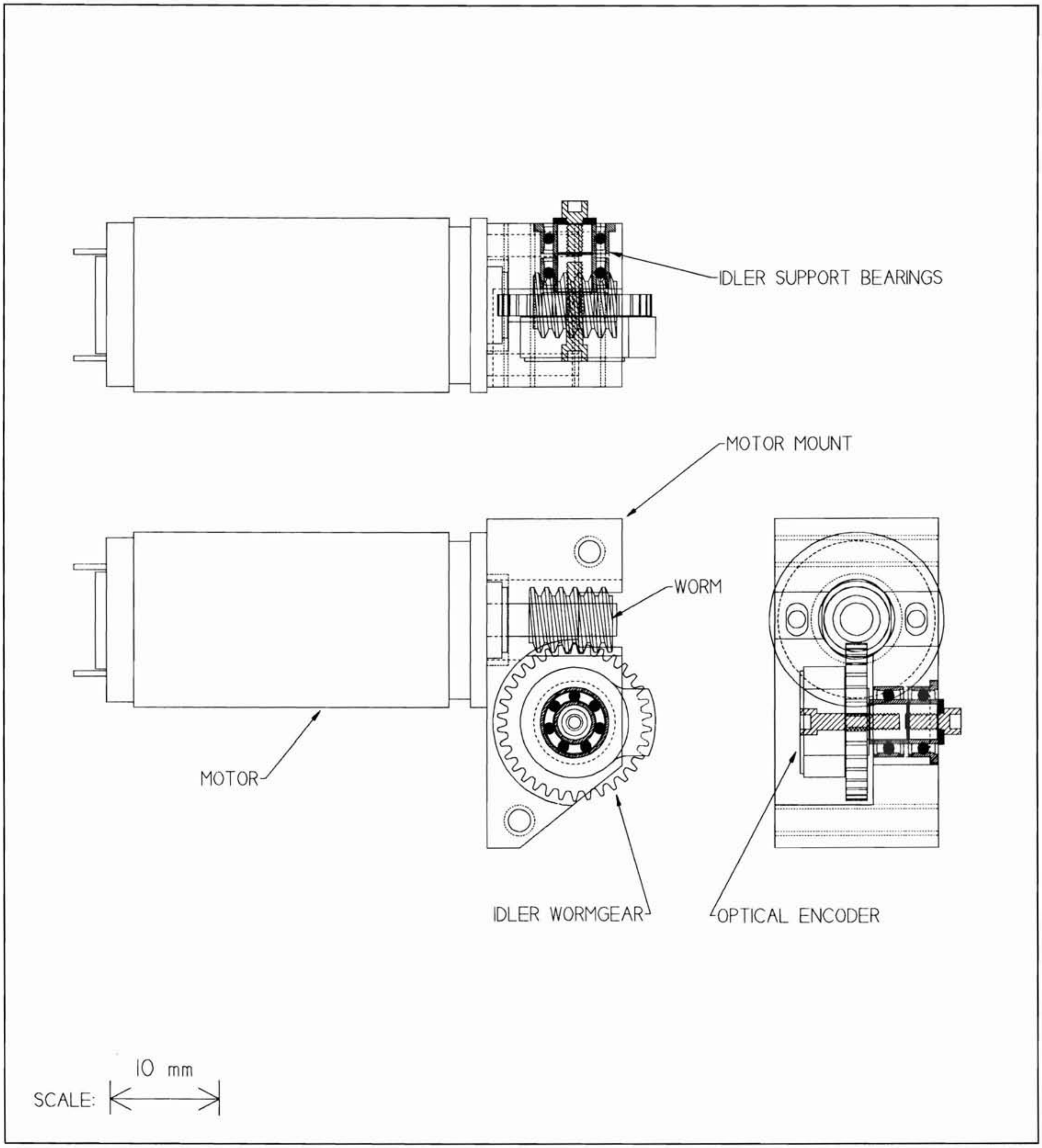

DISTRIBUTION STATEMENT: CONFIDENTIAL AND PROPRIETARY INFORMATION. NOT FOR PUBLIC RELEASE. RESTRICTED DISTRIBUTION.

METRIC
THIRD ANGLE PROJECTION
TOL: X ±0.1 mm
X.X ±0.05mm
X.XX ±0.02mm

CONTRACT NO.
NA9-18558
PH-2 GLOVE CONTR.

BEGEJ CORPORATION
5 CLARET ASH ROAD
LITTLETON, CO 80127
TEL/FAX: (303) 932-2186

APPROVALS | DATE
FINAL:

TITLE
HORIZONTAL MOTOR MOUNT ASSEMBLY

SIZE:
DWG. NO. GLOVE006.GCD
REV. 08 DEC 92
SCALE:
LAYER:
SHEET: 1 OF 1

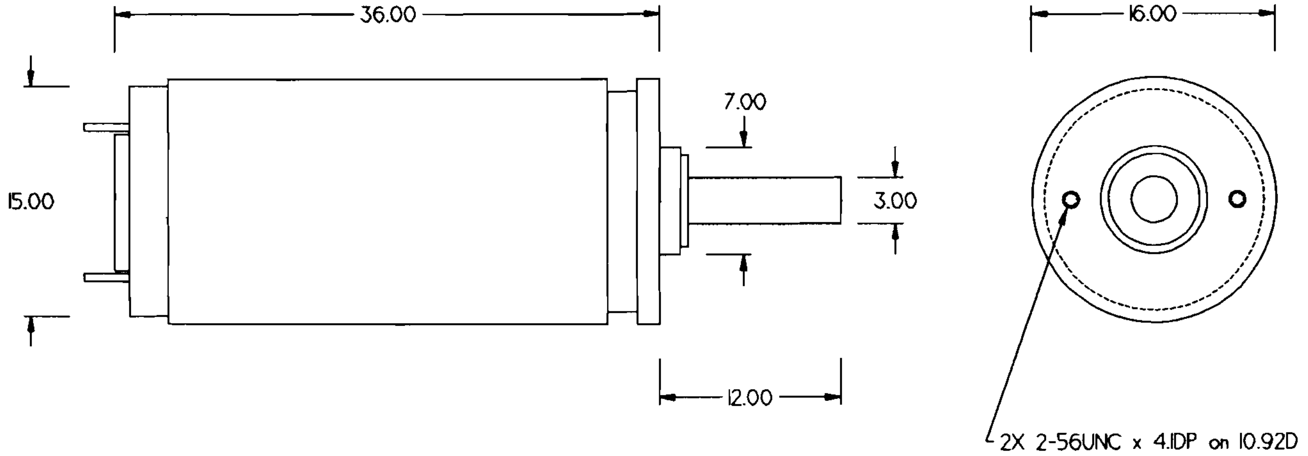

3		MICRO-MO 1516E012S MOTOR WITH 15/5 76:1 GEARHEAD		
QTY	PART/ID NO.	NOMENCLATURE OR DESCRIPTION	MATERIAL SPECIFICATION	ITEM NO.
PARTS LIST				

DISTRIBUTION STATEMENT: CONFIDENTIAL AND PROPRIETARY INFORMATION. NOT FOR PUBLIC RELEASE. RESTRICTED DISTRIBUTION.

METRIC
THIRD ANGLE PROJECTION

TOL:
X ±0.1 mm
X.X ±0.05mm
X.XX ±0.02mm

CONTRACT NO.
NA9-18558
PH-2 GLOVE CONTR.

APPROVALS	DATE
FINAL:	

BEGEJ CORPORATION

5 CLARET ASH ROAD
LITTLETON, CO 80127
TEL/FAX: (303) 932-2186

TITLE ACTUATOR FOR MID-FINGER OR THUMB JOINT

SIZE:		DWG. NO. GLOVE010.GCD	REV. 22 SEPT 93
SCALE: 2X		LAYER: 010	SHEET: 1 OF 1

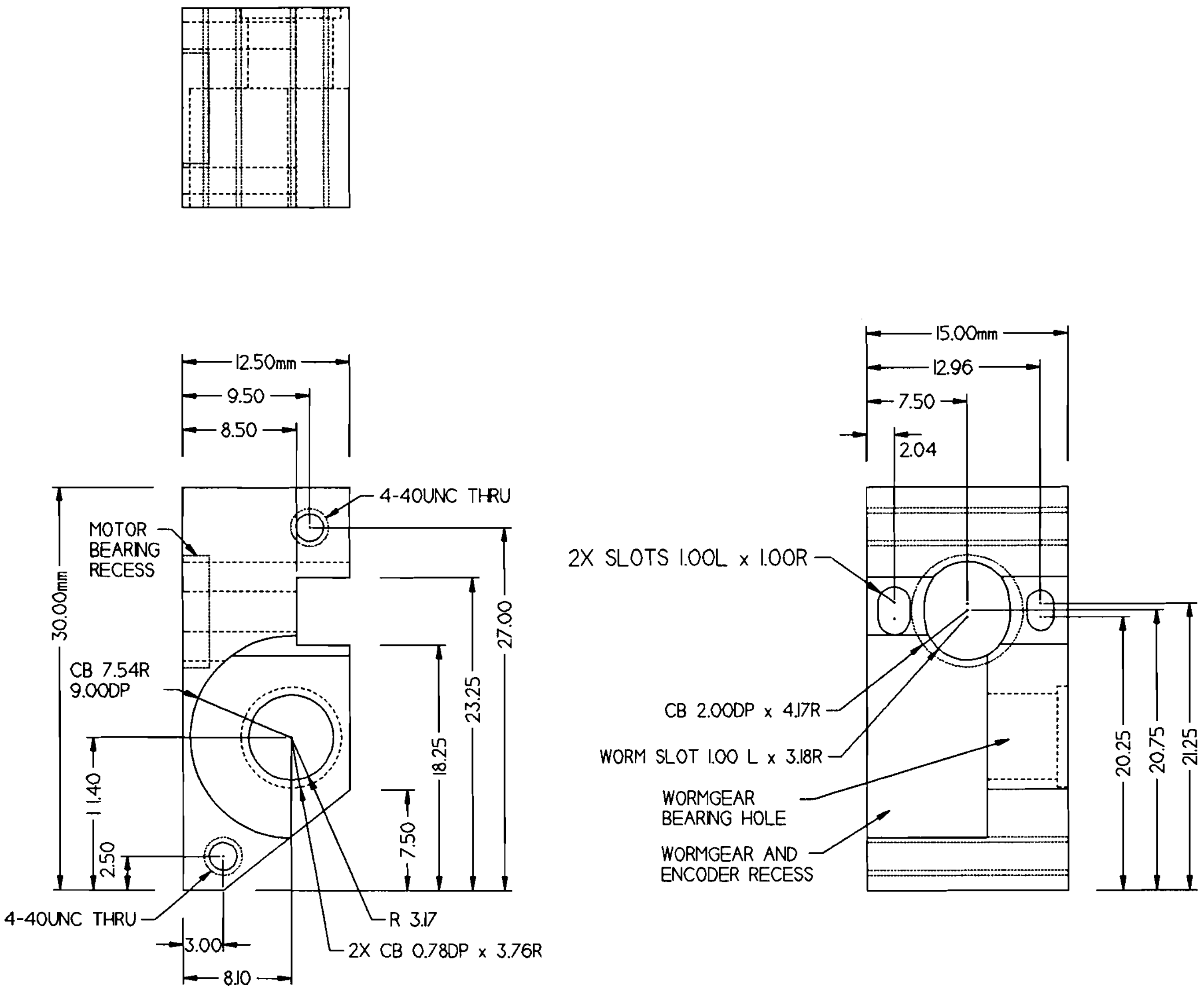

6		HORIZONTAL MOTOR MOUNT (for Micro-Mo motors)	ALUMINUM, 6061-T6	
QTY	PART/ID NO.	NOMENCLATURE OR DESCRIPTION	MATERIAL SPECIFICATION	ITEM NO.

PARTS LIST

DISTRIBUTION STATEMENT: CONFIDENTIAL AND PROPRIETARY INFORMATION. NOT FOR PUBLIC RELEASE. RESTRICTED DISTRIBUTION.

METRIC
THIRD ANGLE PROJECTION

TOL: X ±0.1 mm
XX ±0.05mm
XXX ±0.02mm

CONTRACT NO.
NA9-18558
PH-2 GLOVE CONTR.

BEGEJ CORPORATION

5 CLARET ASH ROAD
LITTLETON, CO 80127
TEL/FAX: (303) 932-2186

APPROVALS	DATE
FINAL:	

TITLE HORIZONTAL MOTOR MOUNT

SIZE:
DWG. NO. GLOVE013
REV. 22 SEP 93
SCALE: 2X
LAYER: 013
SHEET: 1 OF 1

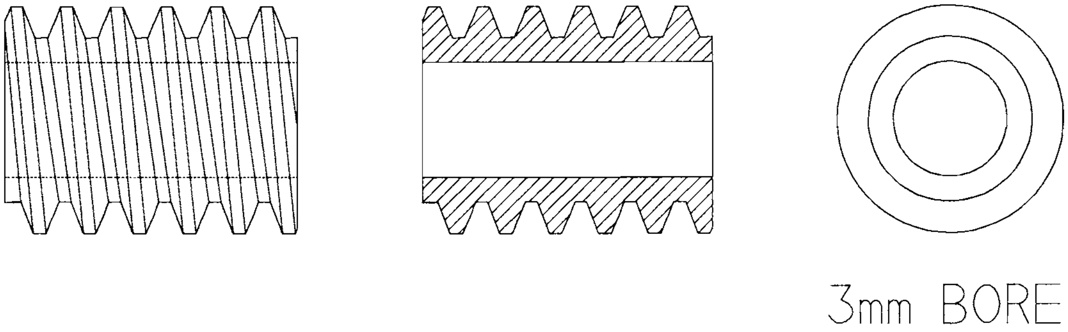

NOTES:

1. Attach to shaft with LOCTITE 324 adhesive.
   Measured breaking torque = 336 oz-in
   3mm shaft, thermal cure 20-30 min @ 300F.
   Clean w/acetone then 240 grit SiC random finish.
   Calculated axial capacity = 5690 oz (355 lb)

1		WORM (NW SHORTLINE 309-6)		
QTY	PART/ID NO.	NOMENCLATURE OR DESCRIPTION	MATERIAL SPECIFICATION	ITEM NO.
PARTS LIST				

DISTRIBUTION STATEMENT: CONFIDENTIAL AND PROPRIETARY INFORMATION. NOT FOR PUBLIC RELEASE. RESTRICTED DISTRIBUTION.

METRIC
THIRD ANGLE PROJECTION

TOL: X ±0.1 mm
X.X ±0.05mm
X.XX ±0.02mm

CONTRACT NO.
NA9-18558
PH-2 GLOVE CONTR.

BEGEJ CORPORATION

5 CLARET ASH ROAD
LITTLETON, CO 80127
TEL/FAX: (303) 932-2186

APPROVALS	DATE
FINAL:	

TITLE WORM

SIZE:

DWG. NO. GLOVE017.GCD

REV. 13 JAN 93

SCALE: 5X

LAYER: 017

SHEET: 1 OF 1

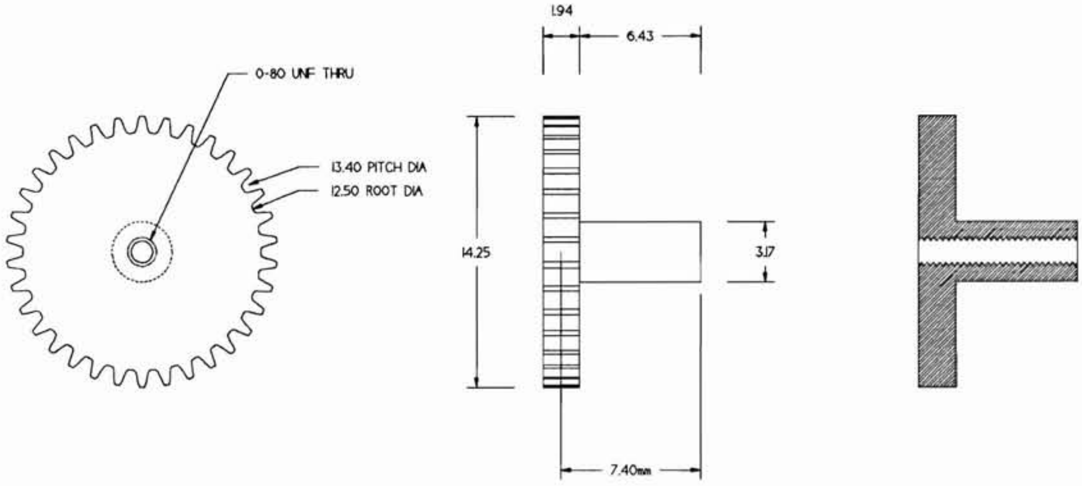

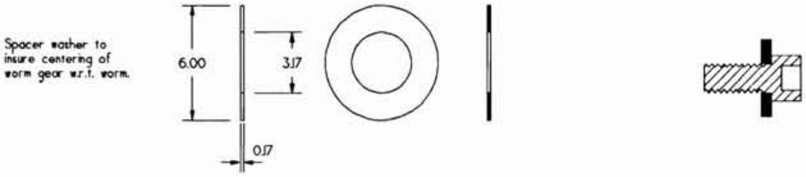

1		WORMGEAR (NW SHORTLINE 309-6. 13.60PD. 34 TEETH)		
QTY	PART/ID NO.	NOMENCLATURE OR DESCRIPTION	MATERIAL SPECIFICATION	ITEM NO.
PARTS LIST				

DISTRIBUTION STATEMENT: CONFIDENTIAL AND PROPRIETARY INFORMATION. NOT FOR PUBLIC RELEASE. RESTRICTED DISTRIBUTION.

METRIC
THIRD ANGLE PROJECTION
TOL: X ±0.1 mm
X.X ±0.05mm
X.XX ±0.02mm

CONTRACT NO.
NA9-18558
PH-2 GLOVE CONTR.

BEGEJ CORPORATION
5 CLARET ASH ROAD
LITTLETON, CO 80127
TEL/FAX: (303) 932-2186

APPROVALS	DATE
FINAL:	

TITLE
IDLER WORMGEAR AND SHAFT

SIZE:
DWG. NO. GLOVE016.GCD
REV. 04 DEC 92
SCALE: 5X
LAYER: 016
SHEET: 1 OF 1

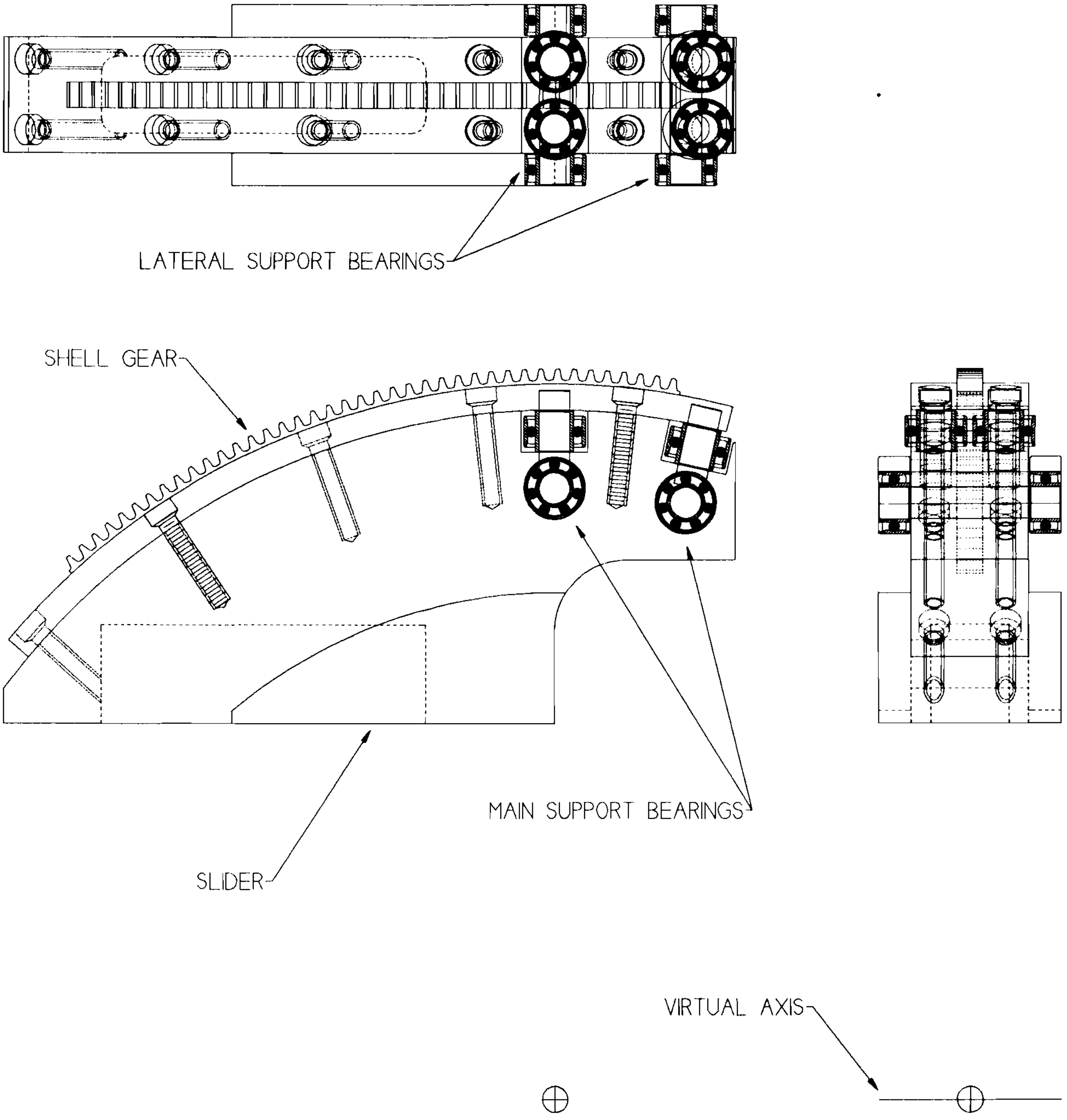

DISTRIBUTION STATEMENT: CONFIDENTIAL AND PROPRIETARY INFORMATION. NOT FOR PUBLIC RELEASE. RESTRICTED DISTRIBUTION.

METRIC THIRD ANGLE PROJECTION	CONTRACT NO. NA9-18558 PH-2 GLOVE CONTR.		BEGEJ CORPORATION		5 CLARET ASH ROAD LITTLETON, CO 80127 TEL/FAX: (303) 932-2186	
	APPROVALS	DATE	TITLE SLIDER ASSEMBLY (ROLLER-BEARING SUPPORT)			
TOL: X ±0.1 mm X.X ±0.05mm X.XX ±0.02mm			SIZE:		DWG. NO. GLOVE007.GCD	REV. 23 DEC 92
	FINAL:		SCALE: 2X		LAYER: 007	SHEET: 1 OF 1

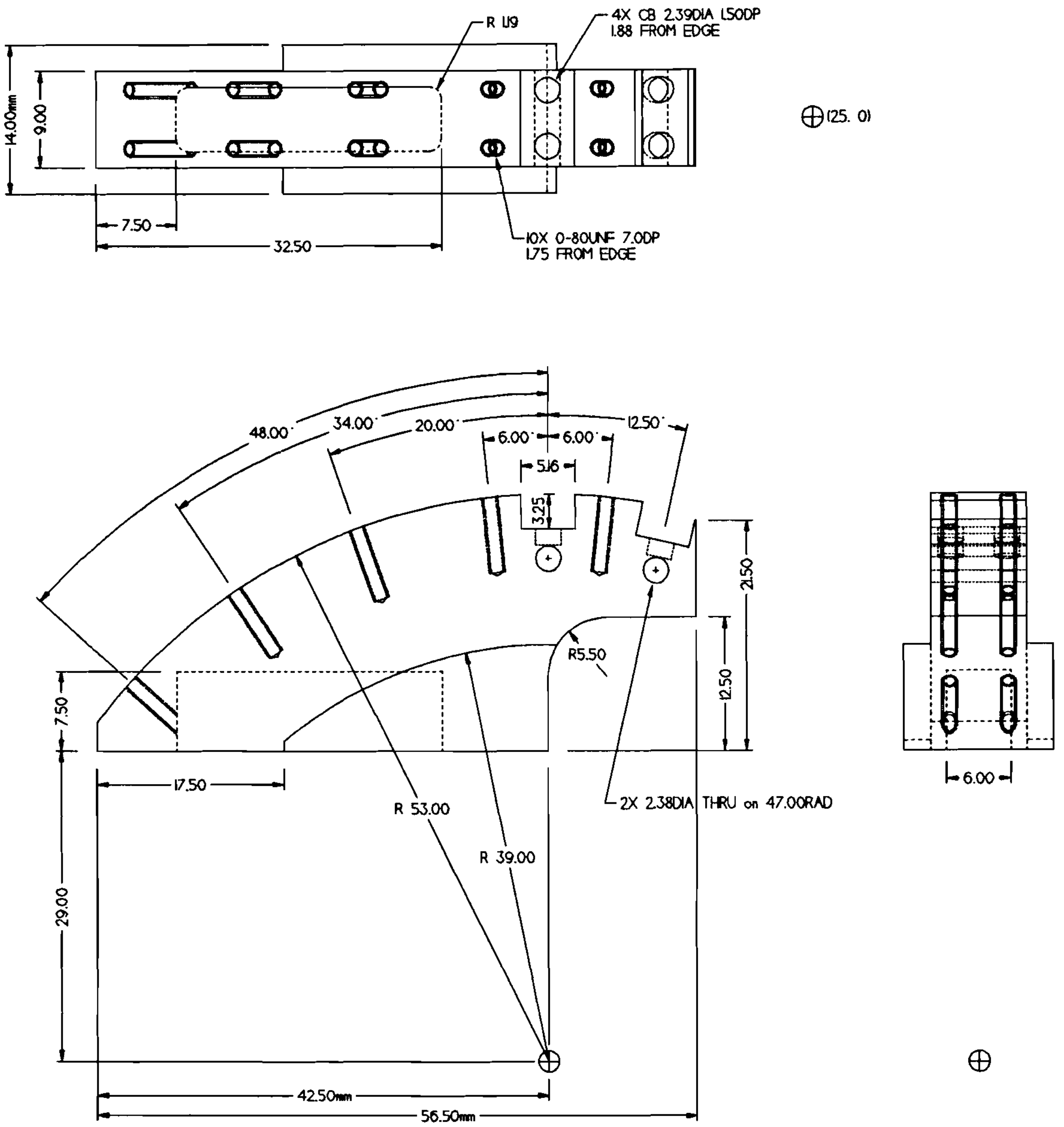

QTY	PART/ID NO.	NOMENCLATURE OR DESCRIPTION	MATERIAL SPECIFICATION	ITEM NO.

PARTS LIST

DISTRIBUTION STATEMENT: CONFIDENTIAL AND PROPRIETARY INFORMATION. NOT FOR PUBLIC RELEASE. RESTRICTED DISTRIBUTION.

METRIC

THIRD ANGLE PROJECTION

TOL:
X ±0.1 mm
X.X ±0.05mm
X.XX ±0.02mm

CONTRACT NO.
NA9-18558
PH-2 GLOVE CONTR.

BEGEJ CORPORATION

5 CLARET ASH ROAD
LITTLETON, CO 80127
TEL/FAX: (303) 932-2186

APPROVALS	DATE
FINAL:	

TITLE SLIDER FOR THUMB (VERSION I)

SIZE:
DWG. NO. GLOVE020
REV. 23 DEC 93
SCALE:
LAYER: 020
SHEET: 1 OF 1

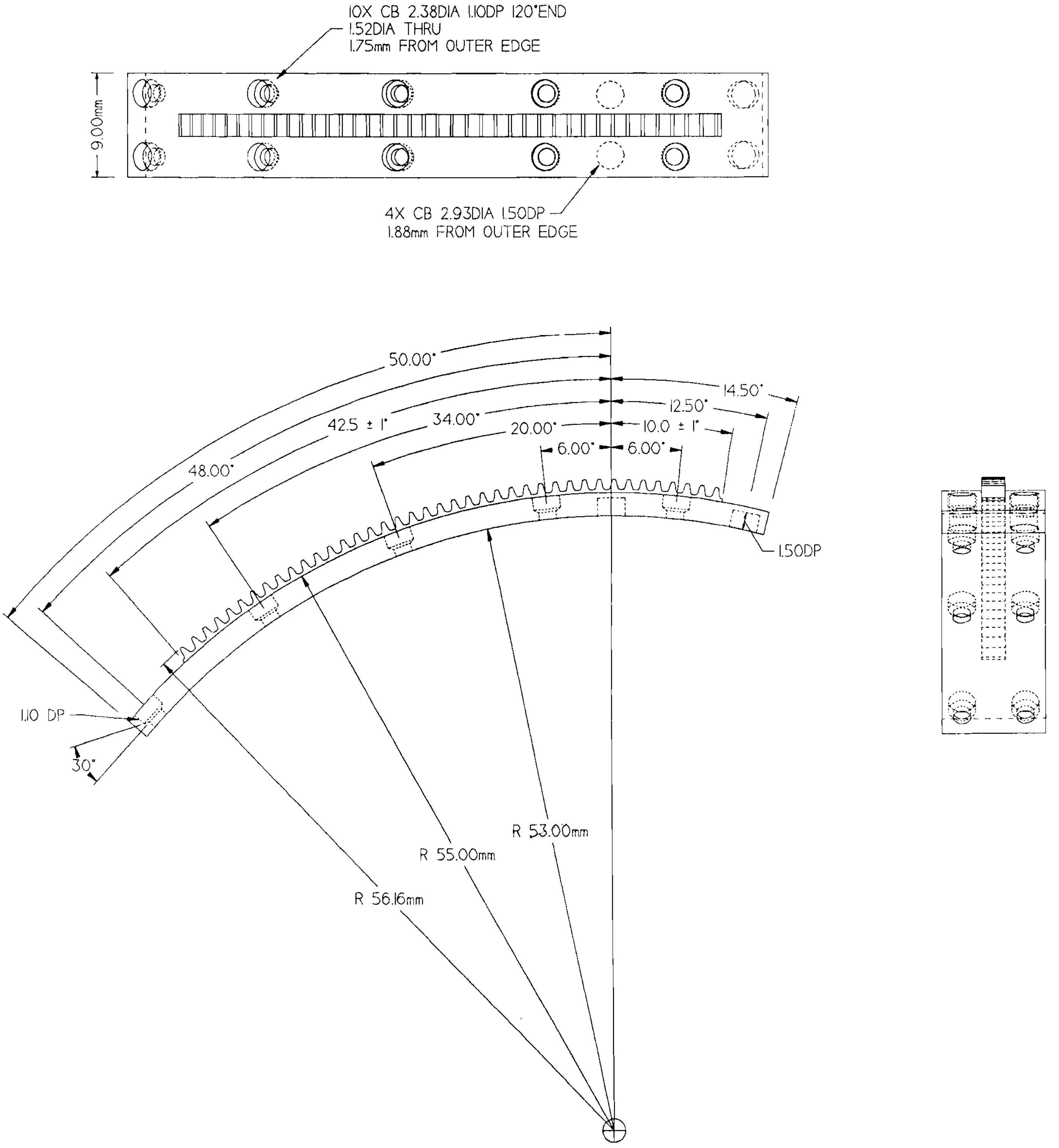

DISTRIBUTION STATEMENT: CONFIDENTIAL AND PROPRIETARY INFORMATION. NOT FOR PUBLIC RELEASE. RESTRICTED DISTRIBUTION.

METRIC THIRD ANGLE PROJECTION	CONTRACT NO. NA9-18558 PH-2 GLOVE CONTR.		BEGEJ CORPORATION			5 CLARET ASH ROAD LITTLETON, CO 80127 TEL/FAX: (303) 932-2186
	APPROVALS	DATE	TITLE SHELL GEAR FOR SLIDER			
TOL: X ±0.1 mm X.X ±0.05mm X.XX ±0.02mm			SIZE:		DWG. NO. GLOVE023.GCD	REV. 23 DEC 92
	FINAL:		SCALE:		LAYER: 023	SHEET: 1 OF 1

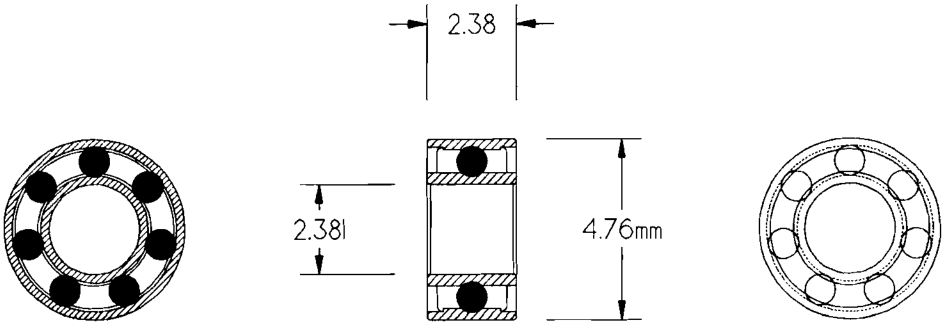

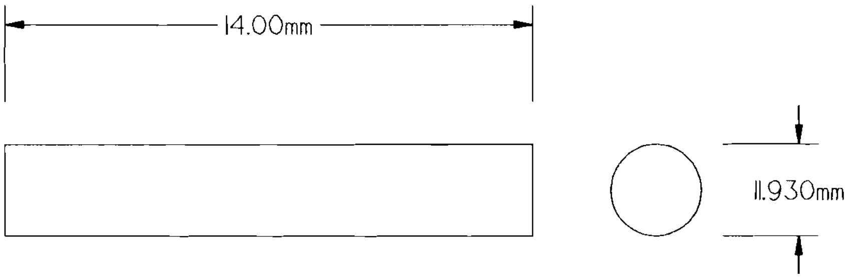

DOWEL PIN
(BEARING PRESS FIT)

1		BEARING (DYNAROLL SF133ZZ. FULL SHIELD)		
QTY	PART/ID NO.	NOMENCLATURE OR DESCRIPTION	MATERIAL SPECIFICATION	ITEM NO.
PARTS LIST				

DISTRIBUTION STATEMENT: CONFIDENTIAL AND PROPRIETARY INFORMATION. NOT FOR PUBLIC RELEASE. RESTRICTED DISTRIBUTION.

METRIC THIRD ANGLE PROJECTION	CONTRACT NO. NA9-18558 PH-2 GLOVE CONTR.		BEGEJ CORPORATION	5 CLARET ASH ROAD LITTLETON, CO 80127 TEL/FAX: (303) 932-2186
	APPROVALS	DATE	TITLE MAIN SLIDER BEARING (WITH SHAFT)	
TOL: X ±0.1 mm X.X ±0.05mm X.XX ±0.02mm			SIZE:	DWG. NO. GLOVE021	REV. 16 DEC 92
	FINAL:		SCALE: 5X	LAYER: 021	SHEET: 1 OF 1

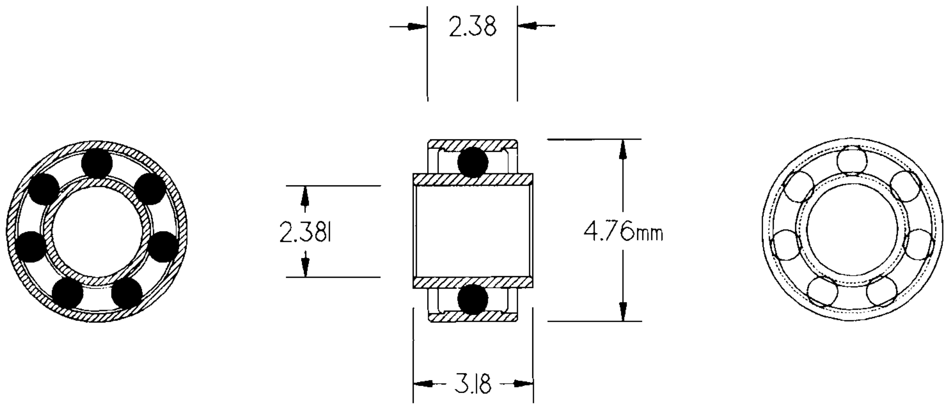

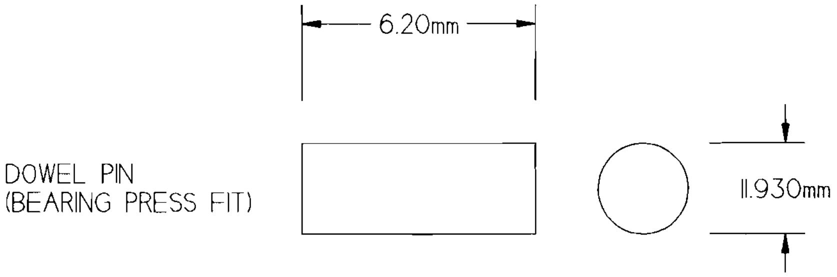

1		BEARING (DYNAROLL SRW133ZZS. FULL SHIELD)		
QTY	PART/ID NO.	NOMENCLATURE OR DESCRIPTION	MATERIAL SPECIFICATION	ITEM NO.
PARTS LIST				

DISTRIBUTION STATEMENT: CONFIDENTIAL AND PROPRIETARY INFORMATION. NOT FOR PUBLIC RELEASE. RESTRICTED DISTRIBUTION.

METRIC THIRD ANGLE PROJECTION	CONTRACT NO. NA9-18558 PH-2 GLOVE CONTR.		BEGEJ CORPORATION		5 CLARET ASH ROAD LITTLETON. CO 80127 TEL/FAX: (303) 932-2186
	APPROVALS	DATE	TITLE SIDE BEARING FOR SLIDER		
TOL: X ±0.1 mm X.X ±0.05mm X.XX ±0.02mm			SIZE:	DWG. NO. GLOVE022.GCD	REV. 16 DEC 92
	FINAL:		SCALE: 5X	LAYER: 022	SHEET: 1 OF 1

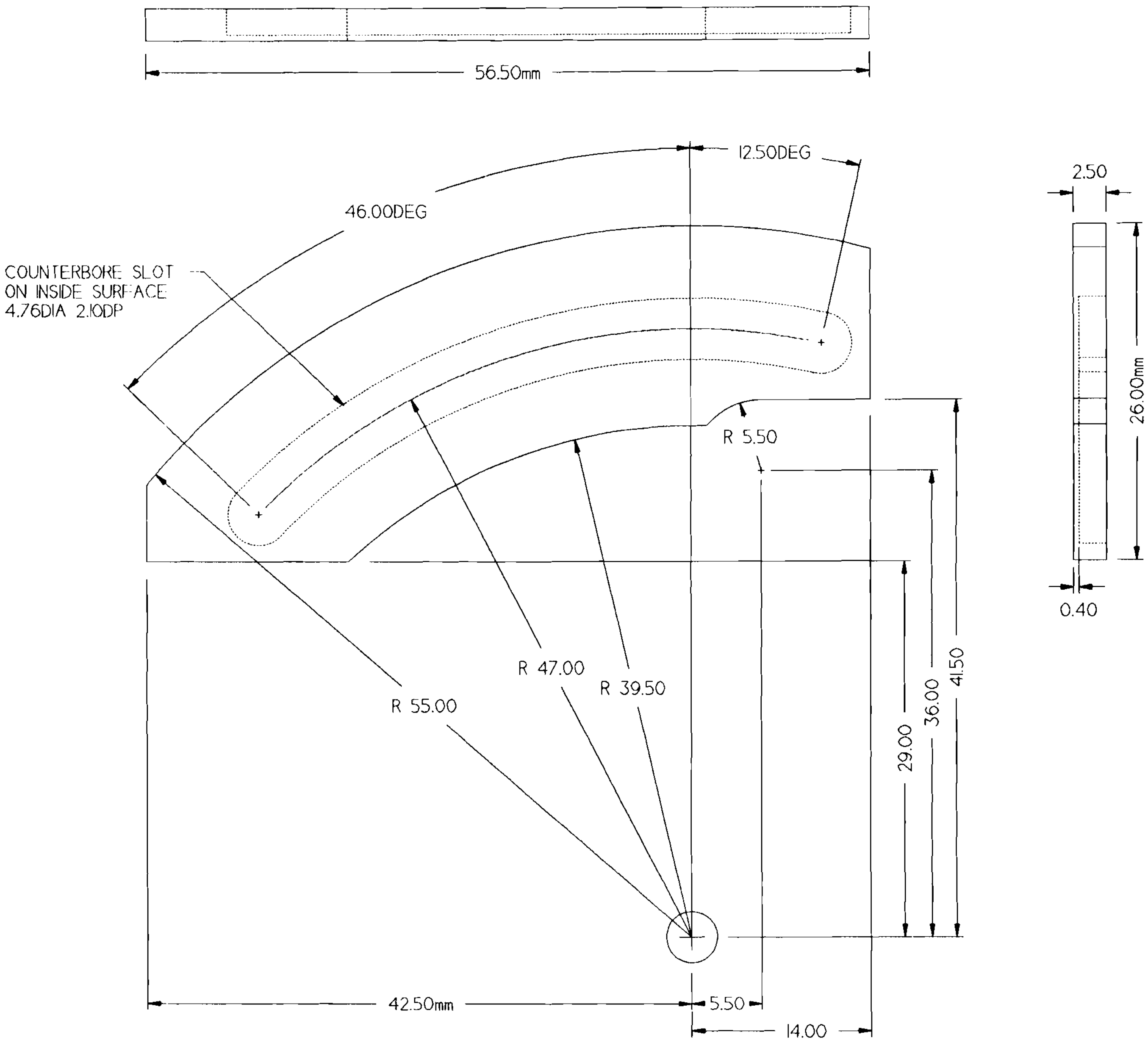

QTY	PART/ID NO.	NOMENCLATURE OR DESCRIPTION	MATERIAL SPECIFICATION	ITEM NO.
PARTS LIST				

DISTRIBUTION STATEMENT: CONFIDENTIAL AND PROPRIETARY INFORMATION. NOT FOR PUBLIC RELEASE. RESTRICTED DISTRIBUTION.

METRIC THIRD ANGLE PROJECTION	CONTRACT NO. NA9-18558 PH-2 GLOVE CONTR.		BEGEJ CORPORATION			5 CLARET ASH ROAD LITTLETON, CO 80127 TEL/FAX: (303) 932-2186
	APPROVALS	DATE	TITLE LEFT BEARING SLOT FOR SLIDER			
TOL: X ±0.1 mm X.X ±0.05mm X.XX ±0.02mm			SIZE:		DWG. NO. GLOVE024	REV. 31 DEC 92
	FINAL:		SCALE: 2X		LAYER: 024	SHEET: 1 OF 2

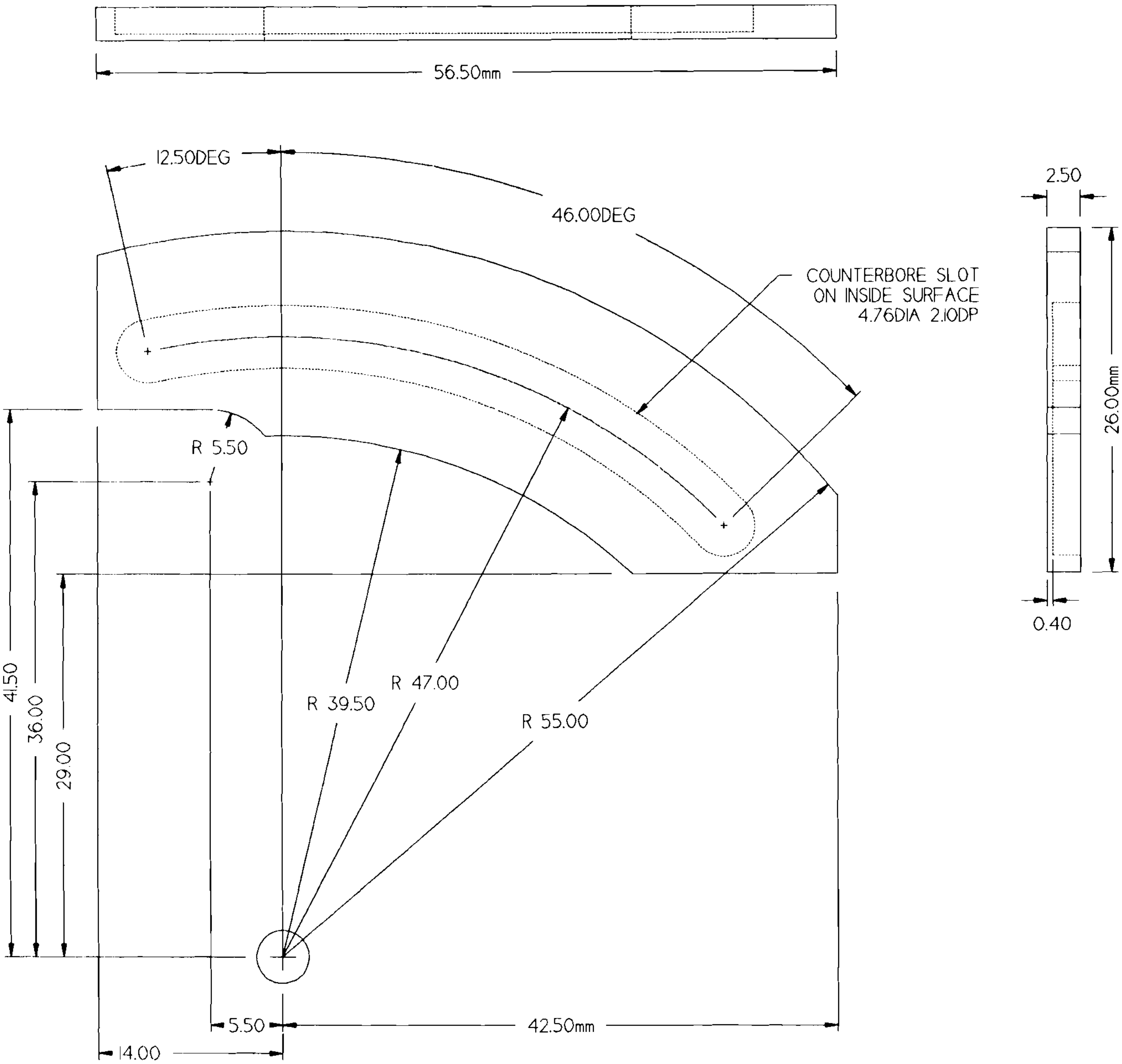

QTY	PART/ID NO.	NOMENCLATURE OR DESCRIPTION	MATERIAL SPECIFICATION	ITEM NO.
PARTS LIST				

DISTRIBUTION STATEMENT: CONFIDENTIAL AND PROPRIETARY INFORMATION. NOT FOR PUBLIC RELEASE. RESTRICTED DISTRIBUTION.

METRIC THIRD ANGLE PROJECTION	CONTRACT NO. NA9-18558 PH-2 GLOVE CONTR.		BEGEJ CORPORATION		5 CLARET ASH ROAD LITTLETON, CO 80127 TEL/FAX: (303) 932-2186
	APPROVALS	DATE	TITLE RIGHT BEARING SLOT FOR SLIDER		
TOL: X ±0.1 mm X.X ±0.05mm X.XX ±0.02mm			SIZE:	DWG. NO. GLOVE024	REV. 31 DEC 92
	FINAL:		SCALE: 2X	LAYER: 024	SHEET: 2 OF 2

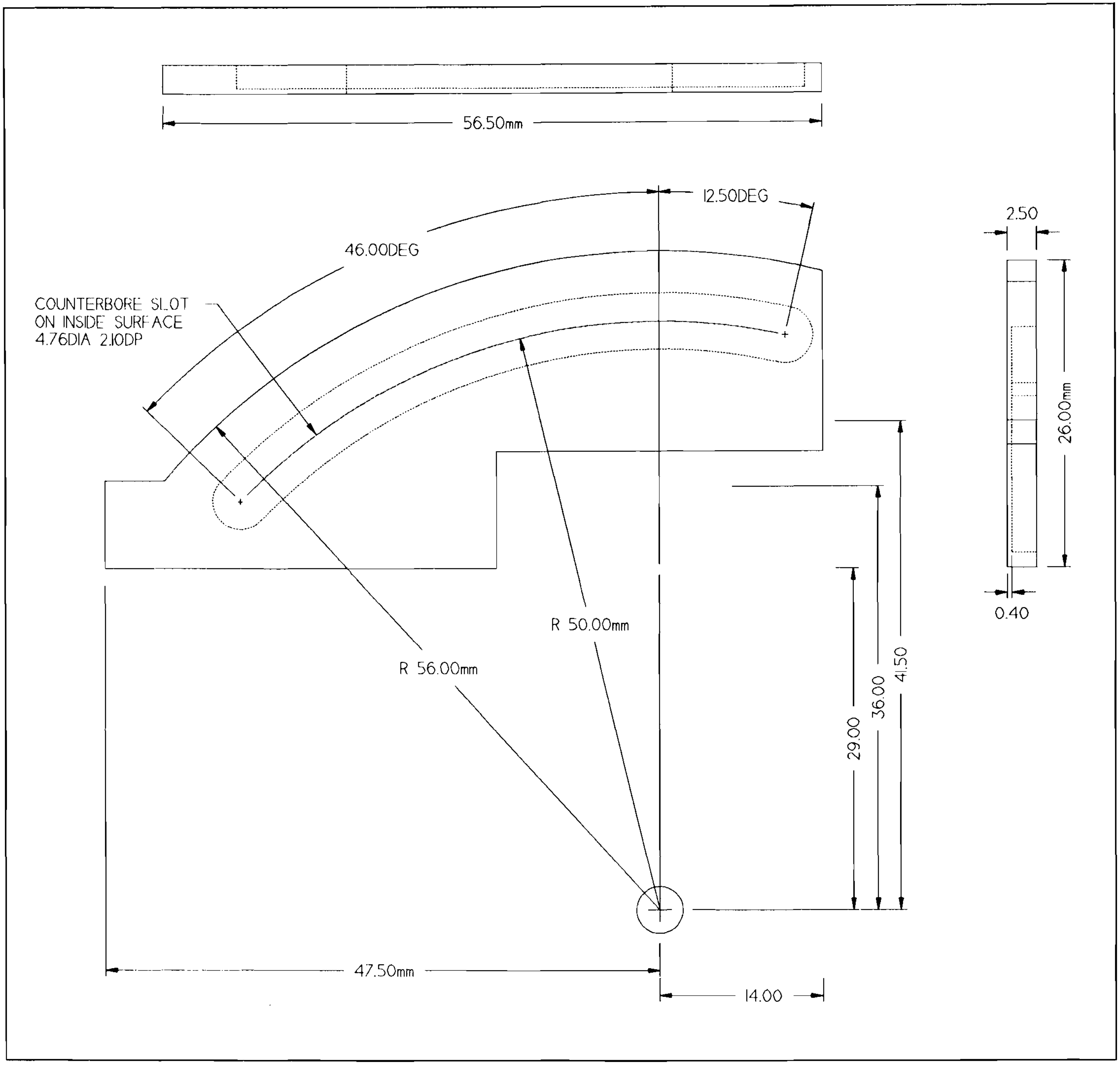

QTY	PART/ID NO.	NOMENCLATURE OR DESCRIPTION	MATERIAL SPECIFICATION	ITEM NO.

PARTS LIST

DISTRIBUTION STATEMENT: CONFIDENTIAL AND PROPRIETARY INFORMATION. NOT FOR PUBLIC RELEASE. RESTRICTED DISTRIBUTION.

METRIC
THIRD ANGLE PROJECTION

CONTRACT NO.
NA9-18558
PH-2 GLOVE CONTR.

BEGEJ CORPORATION

5 CLARET ASH ROAD
LITTLETON, CO 80127
TEL/FAX: (303) 932-2186

APPROVALS	DATE
FINAL:	

TITLE LEFT BEARING SLOT FOR SLIDER (VER. 2)

TOL:
X ±0.1 mm
X.X ±0.05mm
X.XX ±0.02mm

SIZE:
DWG. NO. GLOVE024.GCD
REV. 15 JAN 93
SCALE: 2X
LAYER: 024
SHEET: 1 OF 2

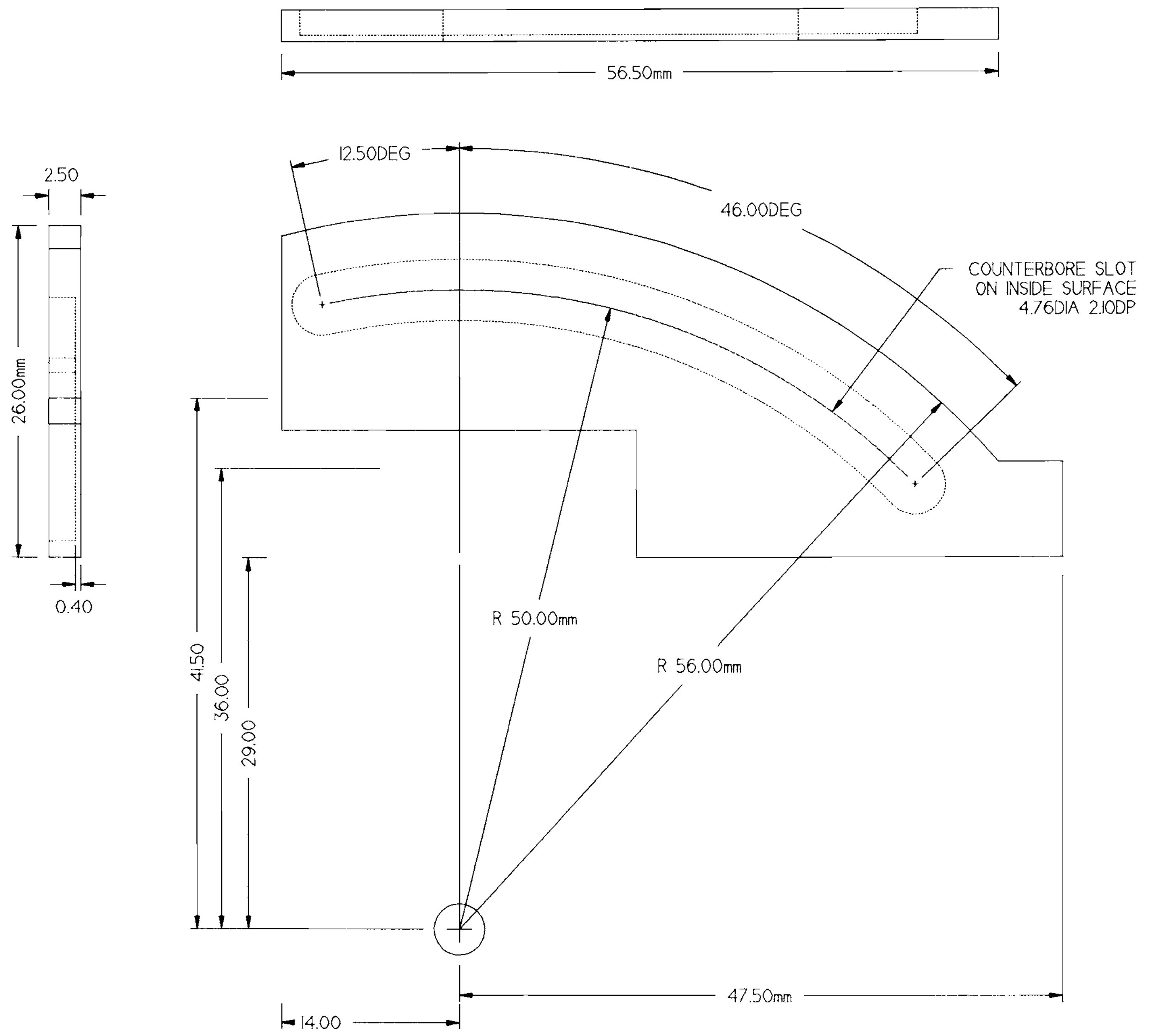

QTY	PART/ID NO.	NOMENCLATURE OR DESCRIPTION	MATERIAL SPECIFICATION	ITEM NO.
PARTS LIST				

DISTRIBUTION STATEMENT: CONFIDENTIAL AND PROPRIETARY INFORMATION. NOT FOR PUBLIC RELEASE. RESTRICTED DISTRIBUTION.

METRIC
THIRD ANGLE PROJECTION

TOL: X ±0.1 mm
X.X ±0.05mm
X.XX ±0.02mm

CONTRACT NO.
NA9-18558
PH-2 GLOVE CONTR.

BEGEJ CORPORATION

5 CLARET ASH ROAD
LITTLETON, CO 80127
TEL/FAX: (303) 932-2186

APPROVALS	DATE
FINAL:	

TITLE RIGHT BEARING SLOT FOR SLIDER (VER. 2)

SIZE:		DWG. NO. GLOVE024.GCD	REV. 15 JAN 93
SCALE: 2X		LAYER: 024	SHEET: 2 OF 2

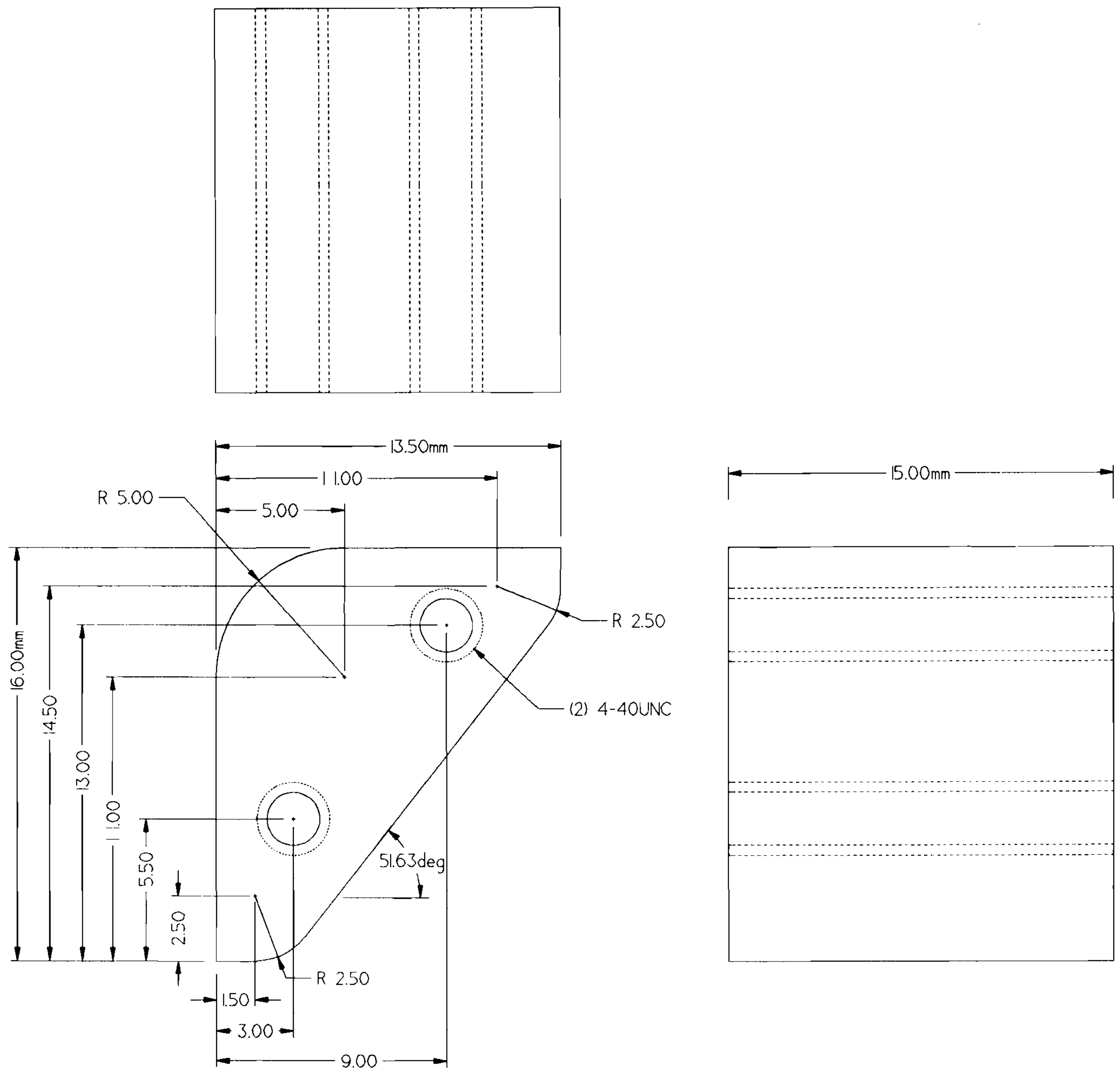

QTY	PART/ID NO.	NOMENCLATURE OR DESCRIPTION	MATERIAL SPECIFICATION	ITEM NO.
PARTS LIST				

DISTRIBUTION STATEMENT: CONFIDENTIAL AND PROPRIETARY INFORMATION. NOT FOR PUBLIC RELEASE. RESTRICTED DISTRIBUTION.

METRIC
THIRD ANGLE PROJECTION

TOL: X ±0.1 mm
X.X ±0.05mm
X.XX ±0.02mm

CONTRACT NO.
NA9-18558
PH-2 GLOVE CONTR.

BEGEJ CORPORATION

5 CLARET ASH ROAD
LITTLETON, CO 80127
TEL/FAX: (303) 932-2186

APPROVALS	DATE
FINAL:	

TITLE
CORNER SUPPORT FOR THUMB SIDEPLATES

SIZE:
SCALE: 4X
DWG. NO. GLOVE026.GCD
LAYER: 026
REV. 31 DEC 92
SHEET: 1 OF 1

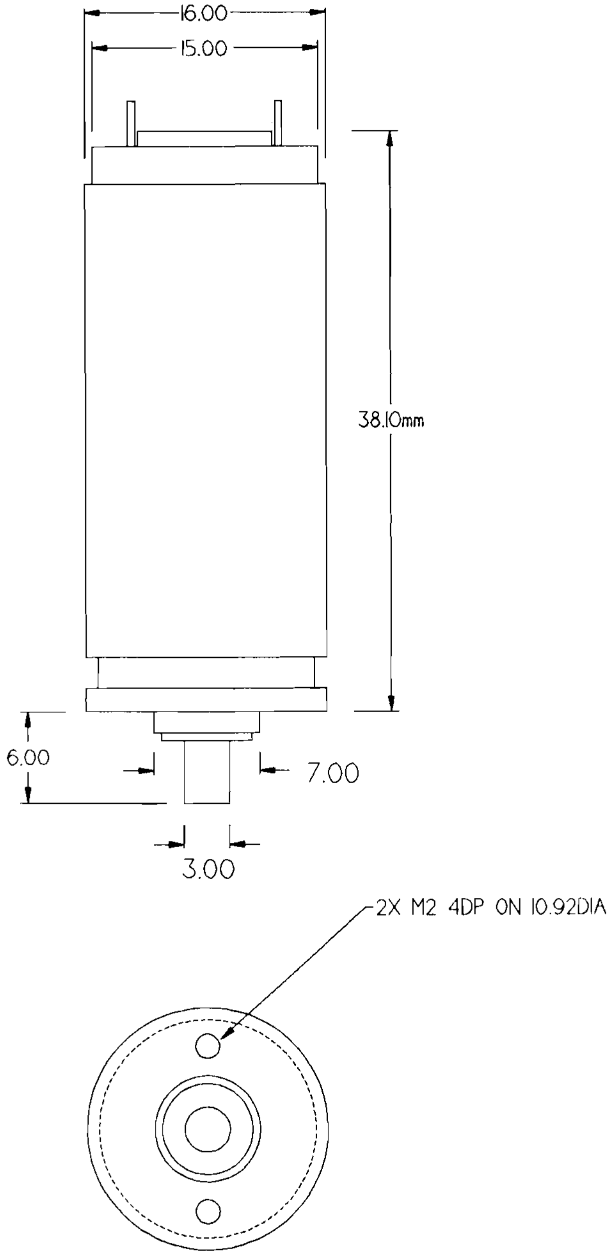

1		MOTOR, MICRO-MO 1516012S, WITH 15/5 262:1 GEARHEAD		
QTY	PART/ID NO.	NOMENCLATURE OR DESCRIPTION	MATERIAL SPECIFICATION	ITEM NO.
PARTS LIST				

DISTRIBUTION STATEMENT: CONFIDENTIAL AND PROPRIETARY INFORMATION. NOT FOR PUBLIC RELEASE. RESTRICTED DISTRIBUTION.

METRIC

THIRD ANGLE PROJECTION

TOL: X ±0.1 mm
X.X ±0.05mm
X.XX ±0.02mm

CONTRACT NO.
NA9-18558
PH-2 GLOVE CONTR.

BEGEJ CORPORATION

5 CLARET ASH ROAD
LITTLETON, CO 80127
TEL/FAX: (303) 932-2186

APPROVALS	DATE
FINAL:	

TITLE
ACTUATOR FOR LATERAL THUMB MOTION

SIZE:

DWG. NO. GLOVE028.GCD

REV. 31 DEC 92

SCALE: 2X

LAYER: 028

SHEET: 1 OF 1

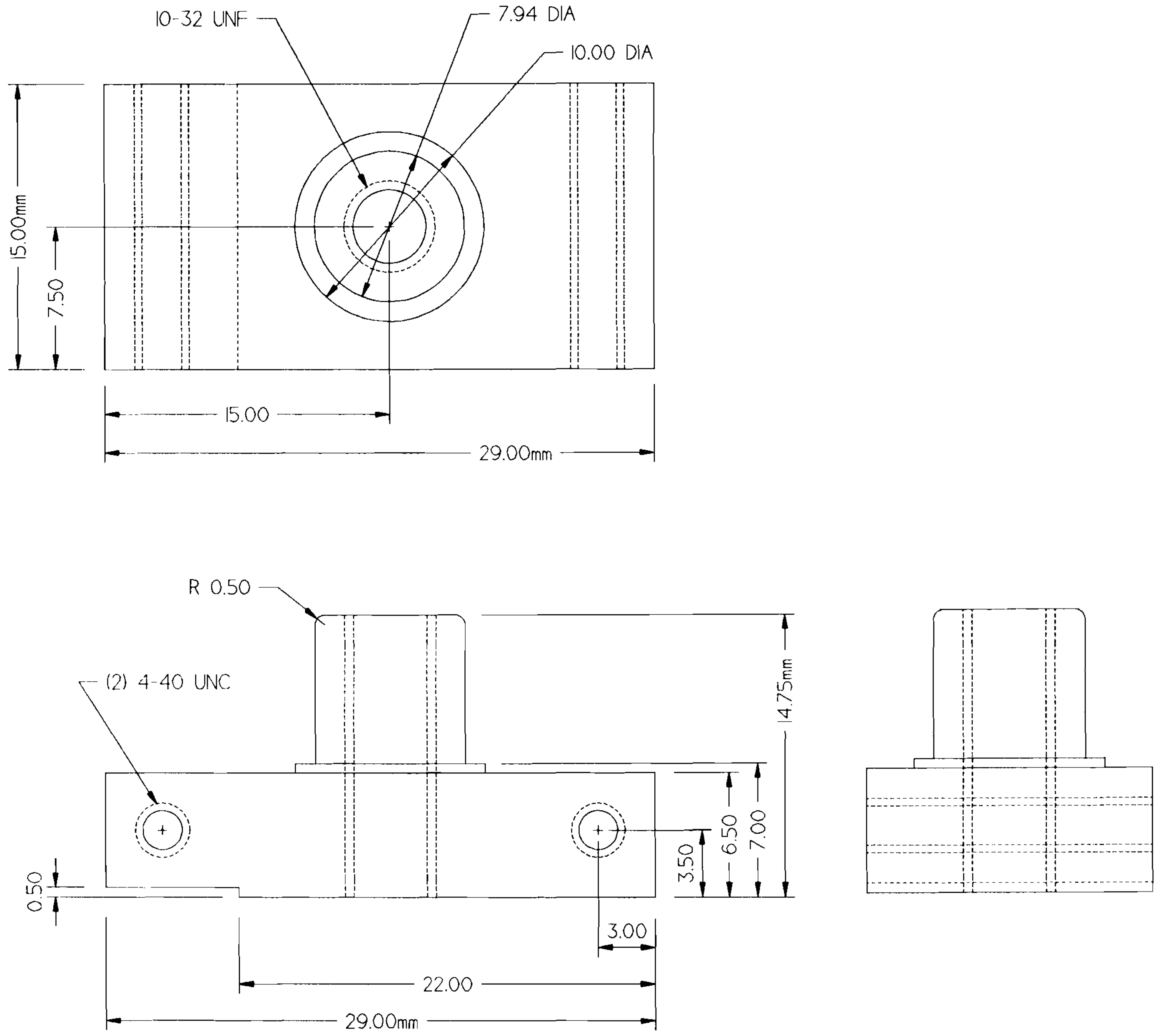

QTY	PART/ID NO.	NOMENCLATURE OR DESCRIPTION	MATERIAL SPECIFICATION	ITEM NO.
PARTS LIST				

DISTRIBUTION STATEMENT: CONFIDENTIAL AND PROPRIETARY INFORMATION. NOT FOR PUBLIC RELEASE. RESTRICTED DISTRIBUTION.

METRIC
THIRD ANGLE PROJECTION
TOL: X ±0.1 mm
X.X ±0.05mm
X.XX ±0.02mm

CONTRACT NO.
NA9-18558
PH-2 GLOVE CONTR.

BEGEJ CORPORATION
5 CLARET ASH ROAD
LITTLETON, CO 80127
TEL/FAX: (303) 932-2186

APPROVALS	DATE
FINAL:	

TITLE SUPPORT PILLAR FOR LATERAL THUMB JOINT

SIZE:		DWG. NO. GLOVE031.GCD	REV. 31 DEC 92
SCALE: 3X		LAYER: 031	SHEET: 1 OF 1

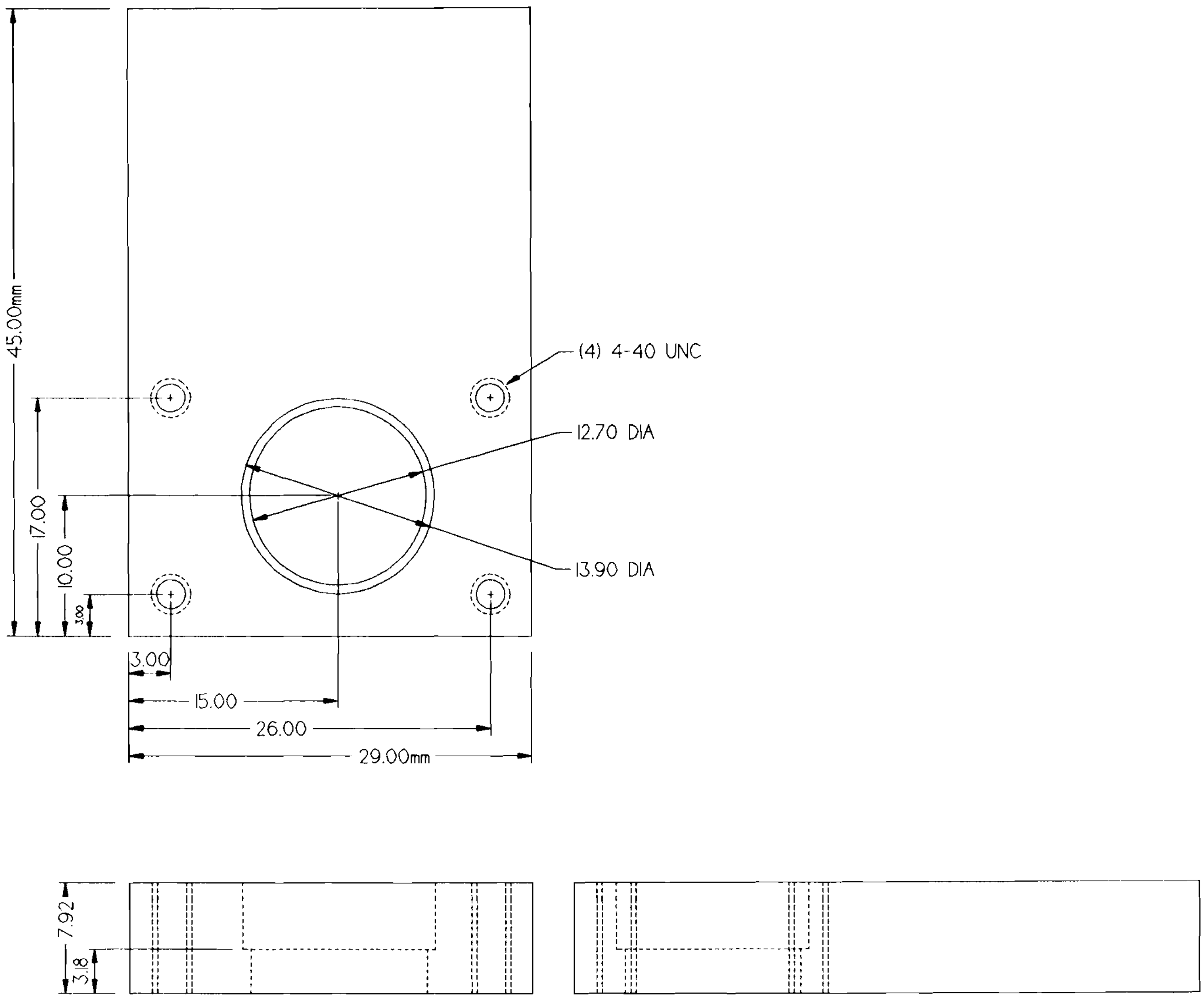

QTY	PART/ID NO.	NOMENCLATURE OR DESCRIPTION	MATERIAL SPECIFICATION	ITEM NO.
PARTS LIST				

DISTRIBUTION STATEMENT: CONFIDENTIAL AND PROPRIETARY INFORMATION. NOT FOR PUBLIC RELEASE. RESTRICTED DISTRIBUTION.

METRIC
THIRD ANGLE PROJECTION
TOL: X ±0.1 mm
X.X ±0.05mm
X.XX ±0.02mm

CONTRACT NO.
NA9-18558
PH-2 GLOVE CONTR.

BEGEJ CORPORATION
5 CLARET ASH ROAD
LITTLETON, CO 80127
TEL/FAX: (303) 932-2186

APPROVALS	DATE
FINAL:	

TITLE MAIN MOUNT BLOCK FOR LATERAL THUMB JOINT

SIZE:		DWG. NO. GLOVE032.GCD	REV. 03 DEC 92
SCALE:		LAYER: 032	SHEET: 1 OF 1

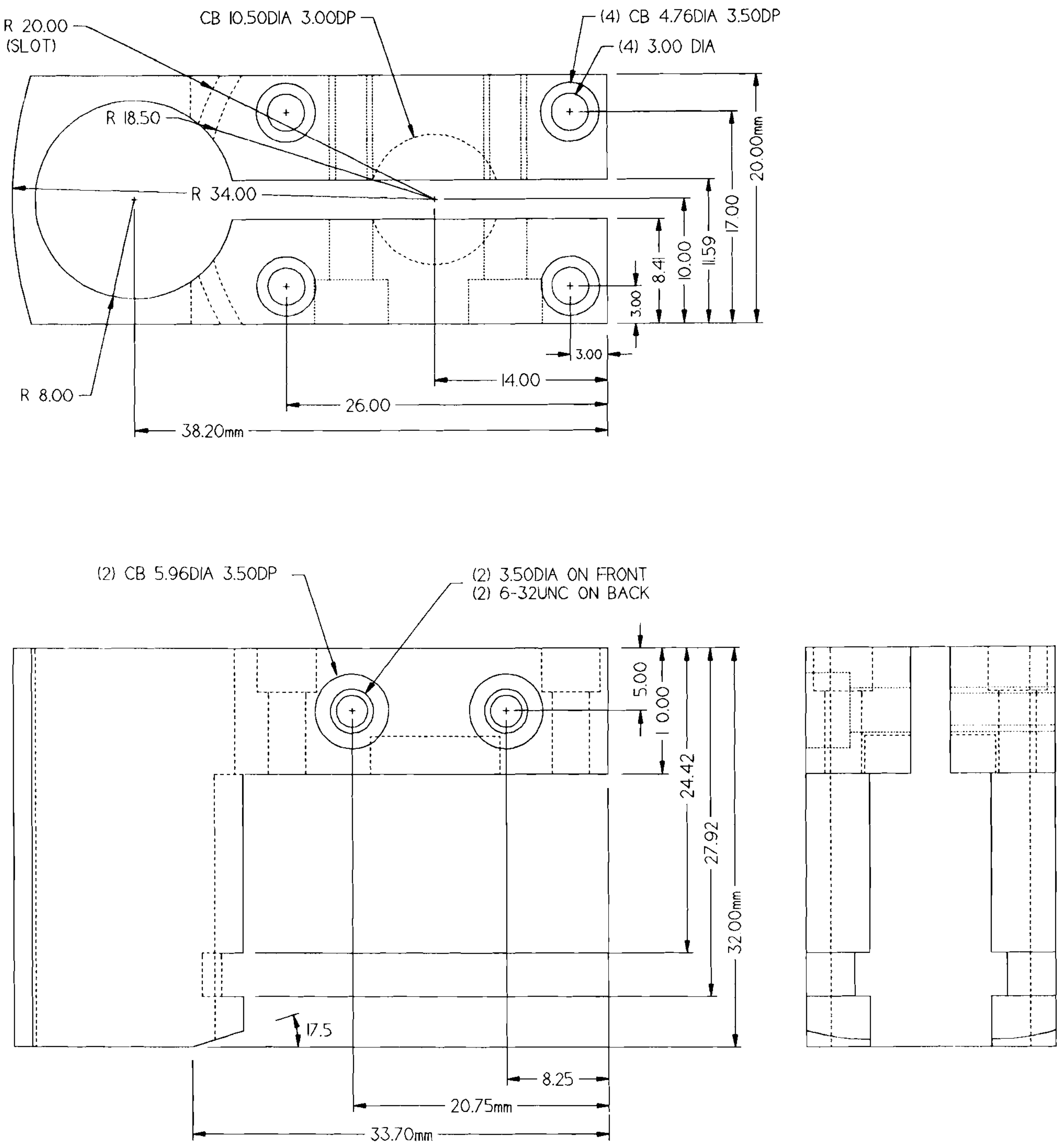

DISTRIBUTION STATEMENT: CONFIDENTIAL AND PROPRIETARY INFORMATION. NOT FOR PUBLIC RELEASE. RESTRICTED DISTRIBUTION.

METRIC

THIRD ANGLE PROJECTION

TOL: X ±0.1 mm
X.X ±0.05mm
X.XX ±0.02mm

CONTRACT NO.
NA9-18558
PH-2 GLOVE CONTR.

APPROVALS | DATE

FINAL:

BEGEJ CORPORATION

5 CLARET ASH ROAD
LITTLETON, CO 80127
TEL/FAX: (303) 932-2186

TITLE MOTOR MOUNT FOR LATERAL THUMB JOINT

SIZE:

DWG. NO. GLOVE033.GCD

REV. 31 DEC 92

SCALE: 2X

LAYER: 033

SHEET: 1 OF 2

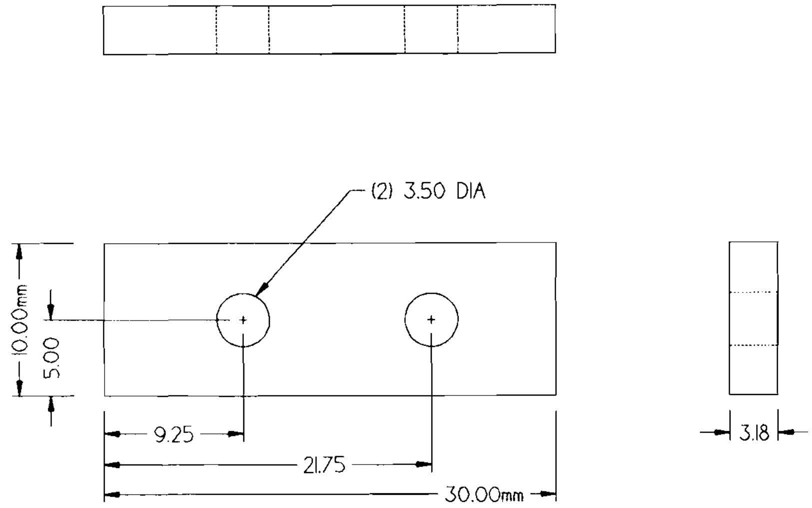

QTY	PART/ID NO.	NOMENCLATURE OR DESCRIPTION	MATERIAL SPECIFICATION	ITEM NO.
PARTS LIST				

DISTRIBUTION STATEMENT: CONFIDENTIAL AND PROPRIETARY INFORMATION. NOT FOR PUBLIC RELEASE. RESTRICTED DISTRIBUTION.

METRIC THIRD ANGLE PROJECTION	CONTRACT NO. NA9-18558 PH-2 GLOVE CONTR.	BEGEJ CORPORATION		5 CLARET ASH ROAD LITTLETON, CO 80127 TEL/FAX: (303) 932-2186
	APPROVALS	DATE	TITLE MOTOR MOUNT SPACER FOR LATERAL THUMB JOINT	
TOL: X ±0.1 mm X.X ±0.05mm X.XX ±0.02mm			SIZE:	DWG. NO. GLOVE033.GCD	REV. 31 DEC 92
	FINAL:		SCALE:	LAYER: 033	SHEET: 2 OF 2

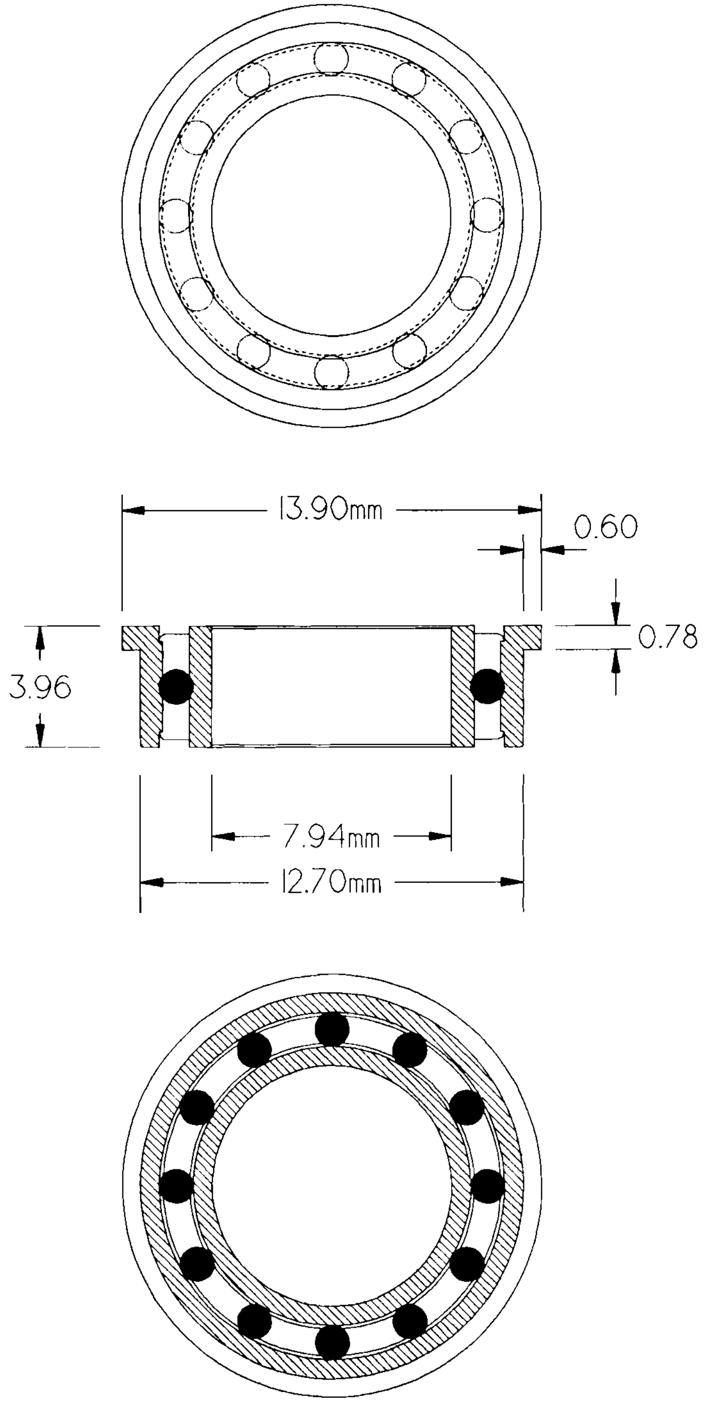

1		FLANGED BEARING (DYNAROLL SFR1810ZZS, FULL SHIELD)		
QTY	PART/ID NO.	NOMENCLATURE OR DESCRIPTION	MATERIAL SPECIFICATION	ITEM NO.
PARTS LIST				

DISTRIBUTION STATEMENT: CONFIDENTIAL AND PROPRIETARY INFORMATION. NOT FOR PUBLIC RELEASE. RESTRICTED DISTRIBUTION.

METRIC
THIRD ANGLE PROJECTION

TOL:
X ±0.1 mm
X.X ±0.05mm
X.XX ±0.02mm

CONTRACT NO.
NA9-18558
PH-2 GLOVE CONTR.

BEGEJ CORPORATION

5 CLARET ASH ROAD
LITTLETON, CO 80127
TEL/FAX: (303) 932-2186

APPROVALS	DATE
FINAL:	

TITLE
LATERAL THUMB BEARING

SIZE:
DWG. NO. GLOVE027.GCD
REV. 07 DEC 92
SCALE:
LAYER: 027
SHEET: 1 OF 1

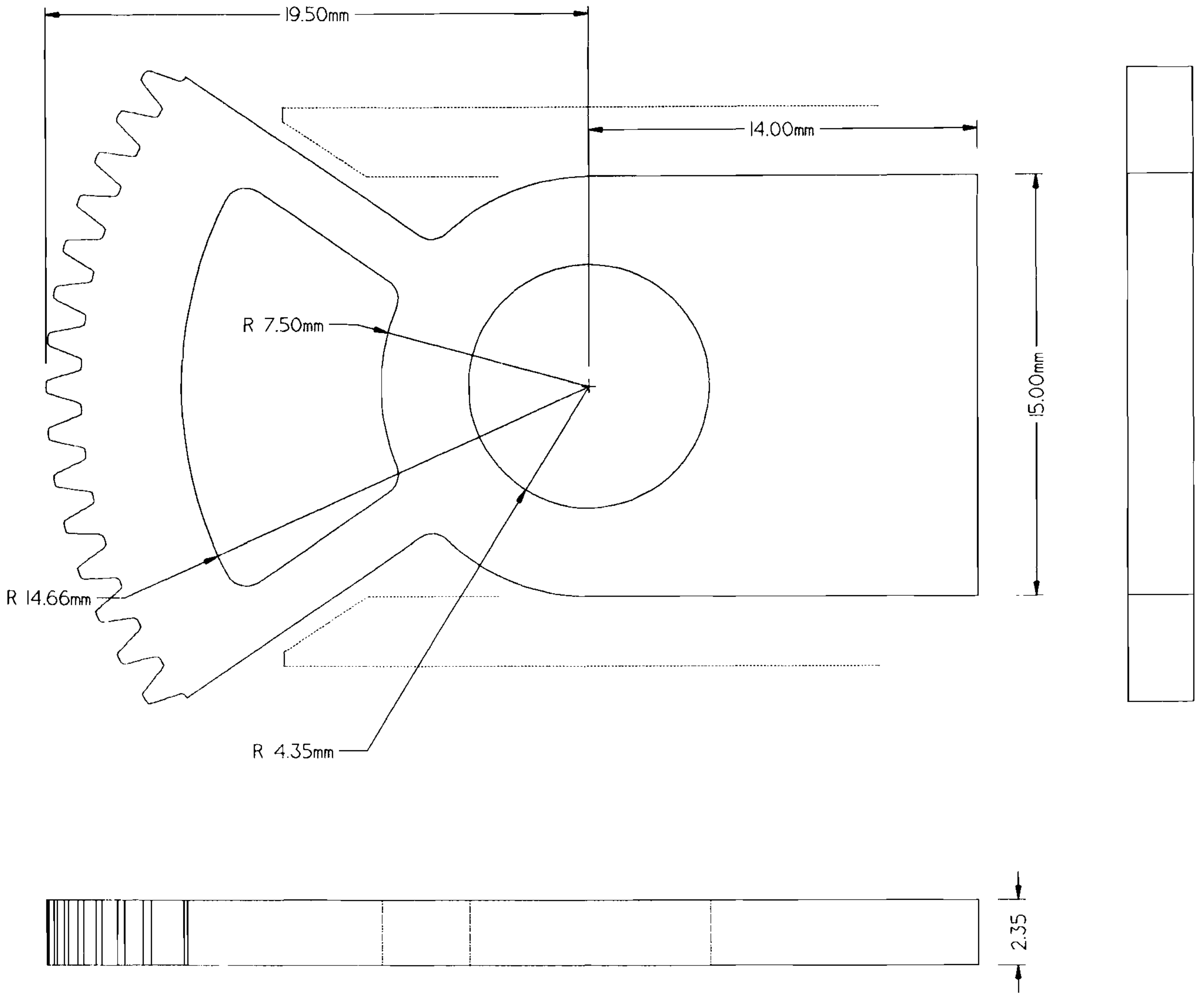

QTY	PART/ID NO.	NOMENCLATURE OR DESCRIPTION	MATERIAL SPECIFICATION	ITEM NO.

PARTS LIST

DISTRIBUTION STATEMENT: CONFIDENTIAL AND PROPRIETARY INFORMATION. NOT FOR PUBLIC RELEASE. RESTRICTED DISTRIBUTION.

METRIC	CONTRACT NO. NA9-18558 PH-2 GLOVE CONTR.		BEGEJ CORPORATION		5 CLARET ASH ROAD LITTLETON, CO 80127 TEL/FAX: (303) 932-2186
THIRD ANGLE PROJECTION	APPROVALS	DATE	TITLE GEAR SEGMENT FOR LATERAL THUMB DRIVE		
TOL: X ±0.1 mm X.X ±0.05mm X.XX ±0.02mm			SIZE:	DWG. NO. GLOVE030.GCD	REV. 07 DEC 92
	FINAL:		SCALE: 4X	LAYER: 030	SHEET: 1 OF 1

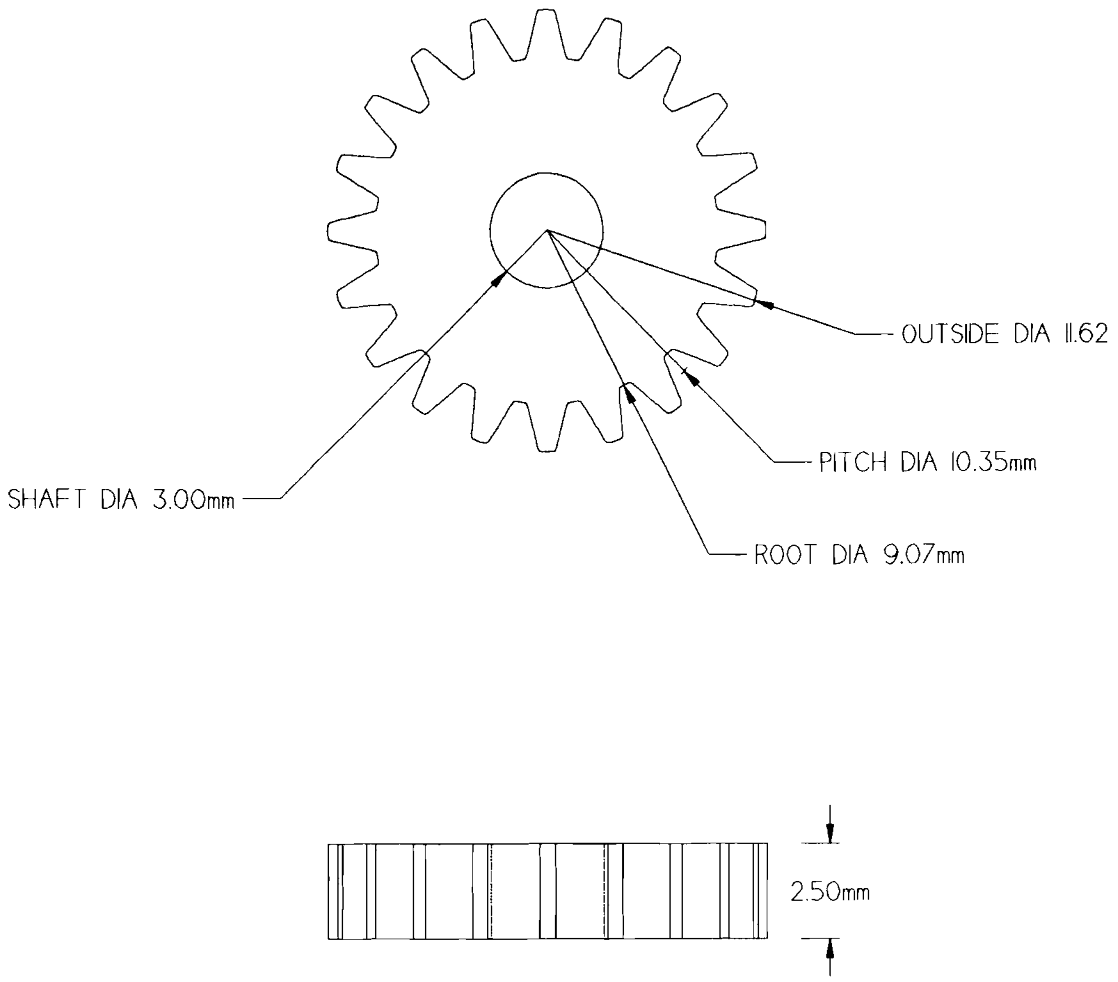

		PINION GEAR. 20 TEETH. 10.35 PITCH DIAMETER		
QTY	PART/ID NO.	NOMENCLATURE OR DESCRIPTION	MATERIAL SPECIFICATION	ITEM NO.
PARTS LIST				

DISTRIBUTION STATEMENT: CONFIDENTIAL AND PROPRIETARY INFORMATION. NOT FOR PUBLIC RELEASE. RESTRICTED DISTRIBUTION.

METRIC

THIRD ANGLE PROJECTION

TOL: X ±0.1 mm
X.X ±0.05mm
X.XX ±0.02mm

CONTRACT NO.
NA9-18558
PH-2 GLOVE CONTR.

BEGEJ CORPORATION

5 CLARET ASH ROAD
LITTLETON. CO 80127
TEL/FAX: (303) 932-2186

APPROVALS	DATE
FINAL:	

TITLE PINION GEAR FOR LATERAL THUMB JOINT

SIZE:

DWG. NO. GLOVE029.GCD

REV. 07 DEC 92

SCALE: 5X

LAYER: 029

SHEET: 1 OF 1

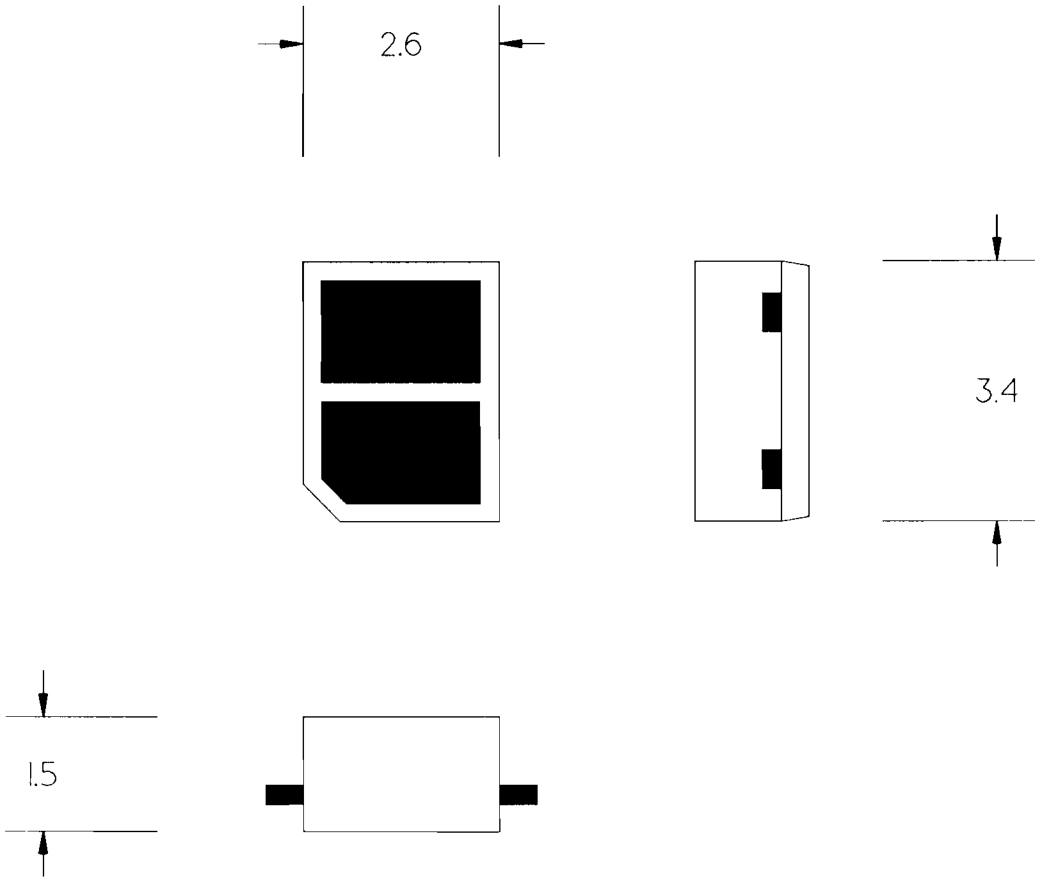

1		PHOTOTRANSISTOR REFLECTIVE SWITCH (MARKTECH MTRS9080)		
QTY	PART/ID NO.	NOMENCLATURE OR DESCRIPTION	MATERIAL SPECIFICATION	ITEM NO.
PARTS LIST				

DISTRIBUTION STATEMENT: CONFIDENTIAL AND PROPRIETARY INFORMATION. NOT FOR PUBLIC RELEASE. RESTRICTED DISTRIBUTION.

METRIC THIRD ANGLE PROJECTION	CONTRACT NO. NA9-18558 PH-2 GLOVE CONTR.		BEGEJ CORPORATION		5 CLARET ASH ROAD LITTLETON, CO 80127 TEL/FAX: (303) 932-2186	
	APPROVALS	DATE	TITLE PHOTOELECTRIC SWITCH			
TOL: X ±0.1 mm X.X ±0.05mm X.XX ±0.02mm			SIZE:		DWG. NO. GLOVE035.GCD	REV. 21 JAN 93
	FINAL:		SCALE: 10X		LAYER: 035	SHEET: 1 OF 1

APPENDIX E

MECHANICAL DRAWINGS of TACTILE SENSOR COMPONENTS

The following 10 pages contain detailed mechanical drawings describing the various components comprising the Phase-II tactile sensor shown in Figures 35, 36, and 38.

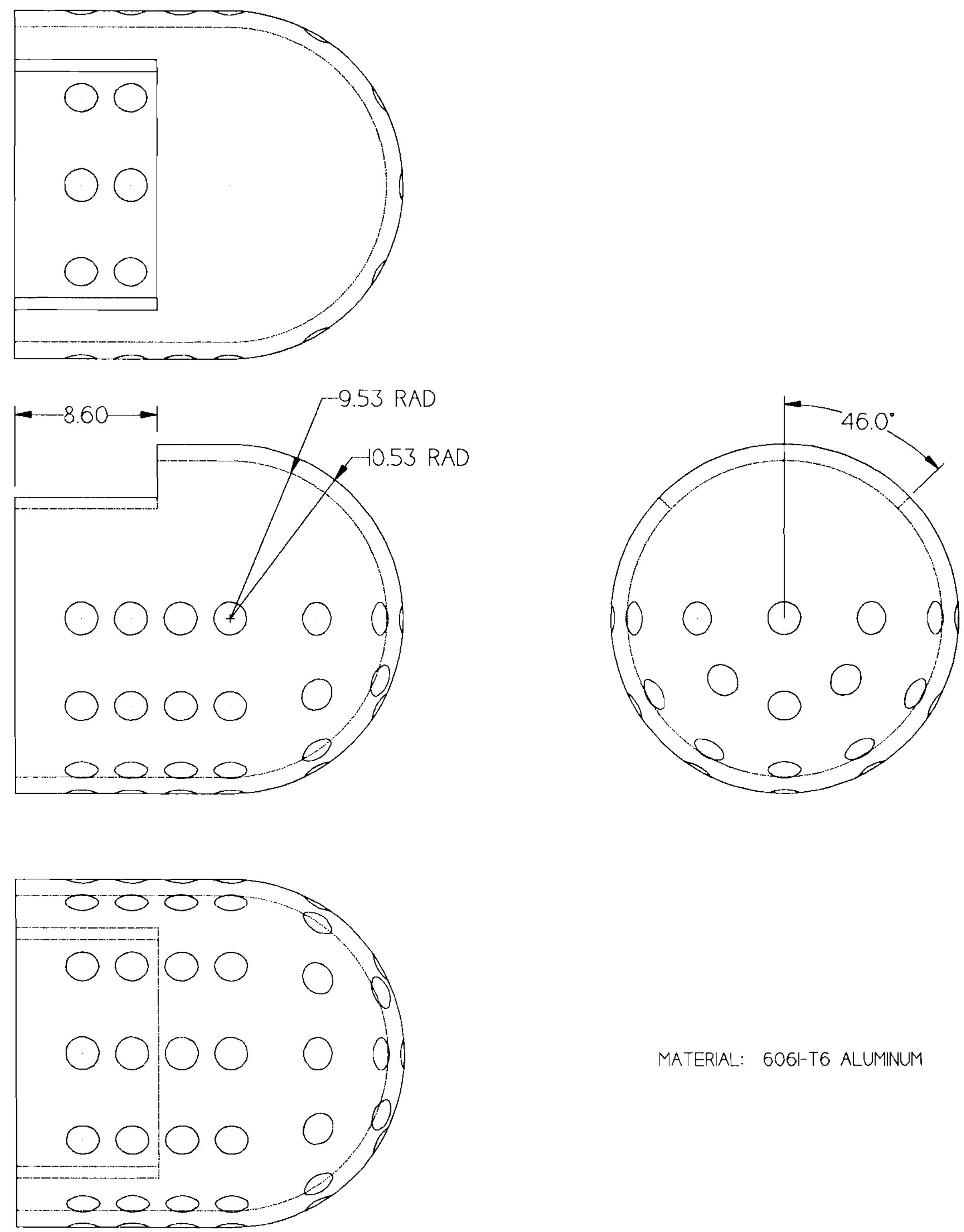

MATERIAL: 6061-T6 ALUMINUM

DISTRIBUTION STATEMENT: CONFIDENTIAL AND PROPRIETARY INFORMATION. NOT FOR PUBLIC RELEASE. RESTRICTED DISTRIBUTION.

METRIC	CONTRACT NO. NA9-18558 PH-2 GLOVE CONTR.		BEGEJ CORPORATION			5 CLARET ASH ROAD LITTLETON. CO 80127 TEL/FAX: (303) 932-2186
THIRD ANGLE PROJECTION	APPROVALS	DATE	TITLE	SENSOR COVER		
TOL: X ±0.1 mm X.X ±0.05mm X.XX ±0.02mm			SIZE:		DWG. NO. TSEN2021.GCD	REV. 28 JAN 93
	FINAL:		SCALE: 2.5X		LAYER: 021	SHEET: 1 OF 1

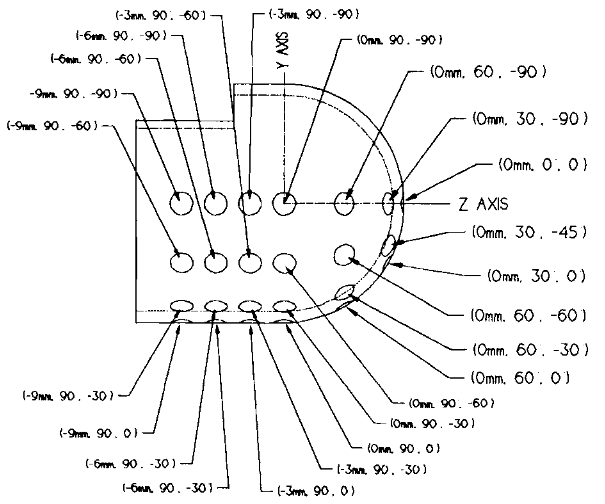

FRONT VIEW

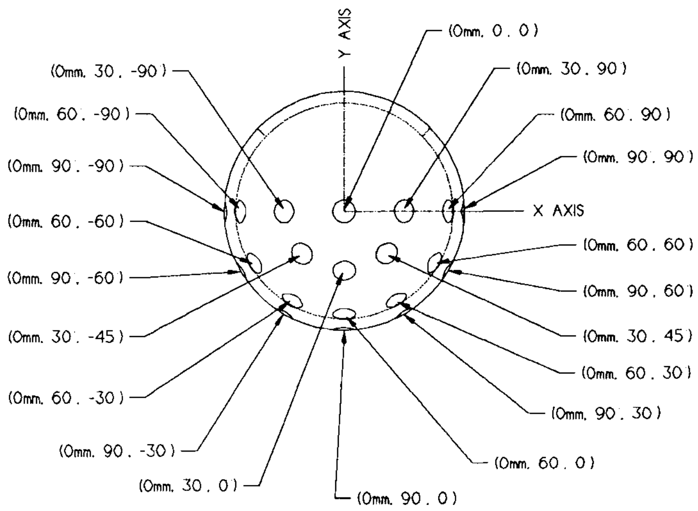

RIGHT VIEW

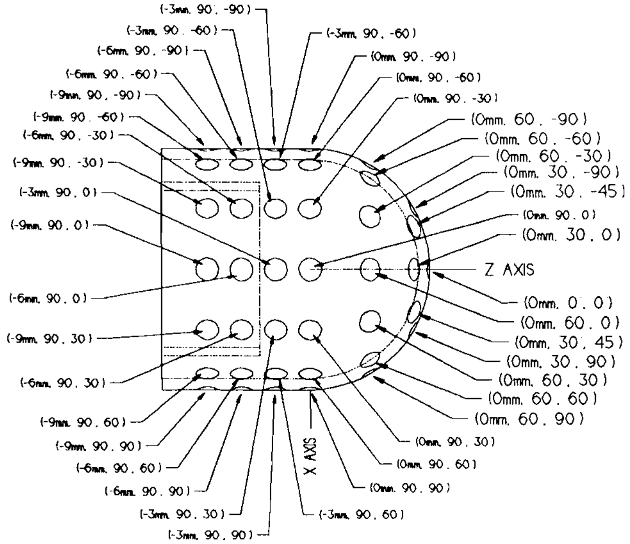

BOTTOM VIEW

(41) HOLES IN COVER STRUCTURE. 2.00mm DIA.

QTY	PART/ID NO.	NOMENCLATURE OR DESCRIPTION	MATERIAL SPECIFICATION	ITEM NO.
PARTS LIST				

DISTRIBUTION STATEMENT: CONFIDENTIAL AND PROPRIETARY INFORMATION. NOT FOR PUBLIC RELEASE. RESTRICTED DISTRIBUTION.

METRIC
THIRD ANGLE PROJECTION

TOL: X ±0.1 mm
X.X ±0.05mm
X.XX ±0.02mm

CONTRACT NO.
NA9-18558
PH-2 GLOVE CONTR.

APPROVALS	DATE
FINAL:	

BEGEJ CORPORATION

5 CLARET ASH ROAD
LITTLETON, CO 80127
TEL/FAX: (303) 932-2186

TITLE
SENSOR COVER (HOLE PLACEMENT)

SIZE:
DWG. NO. TSEN2021.GCD
REV. 28 JAN 93
SCALE:
LAYER: 021
SHEET: 1 OF 1

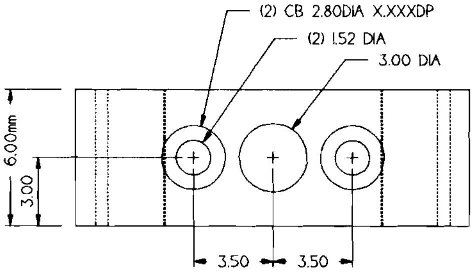

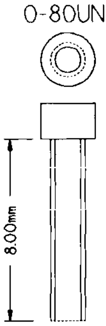

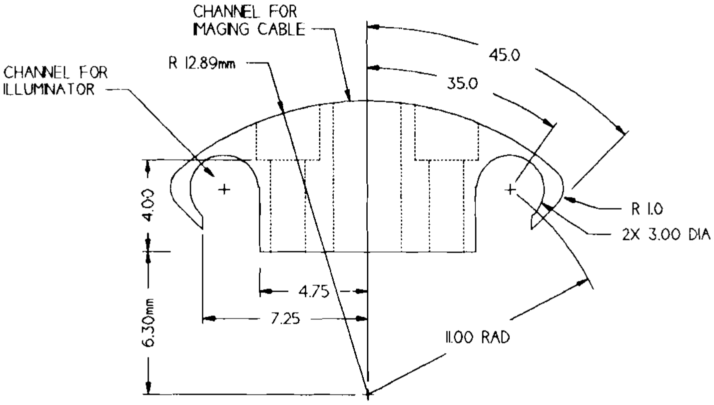

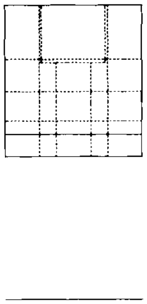

DISTRIBUTION STATEMENT: CONFIDENTIAL AND PROPRIETARY INFORMATION. NOT FOR PUBLIC RELEASE. RESTRICTED DISTRIBUTION.

METRIC
THIRD ANGLE PROJECTION

TOL: X ±0.1 mm
X.X ±0.05mm
X.XX ±0.02mm

CONTRACT NO.
NA9-18558
PH-2 GLOVE CONTR.

BEGEJ CORPORATION
5 CLARET ASH ROAD
LITTLETON, CO 80127
TEL/FAX: (303) 932-2186

APPROVALS	DATE
FINAL:	

TITLE IMAGING FIBER CONNECTOR (VER. 2: INT. ILLUM.)

SIZE:		DWG. NO. TSEN2013.GCD	REV. 28 JAN 1993
SCALE: 3X		LAYER: 013	SHEET: 1 OF 1

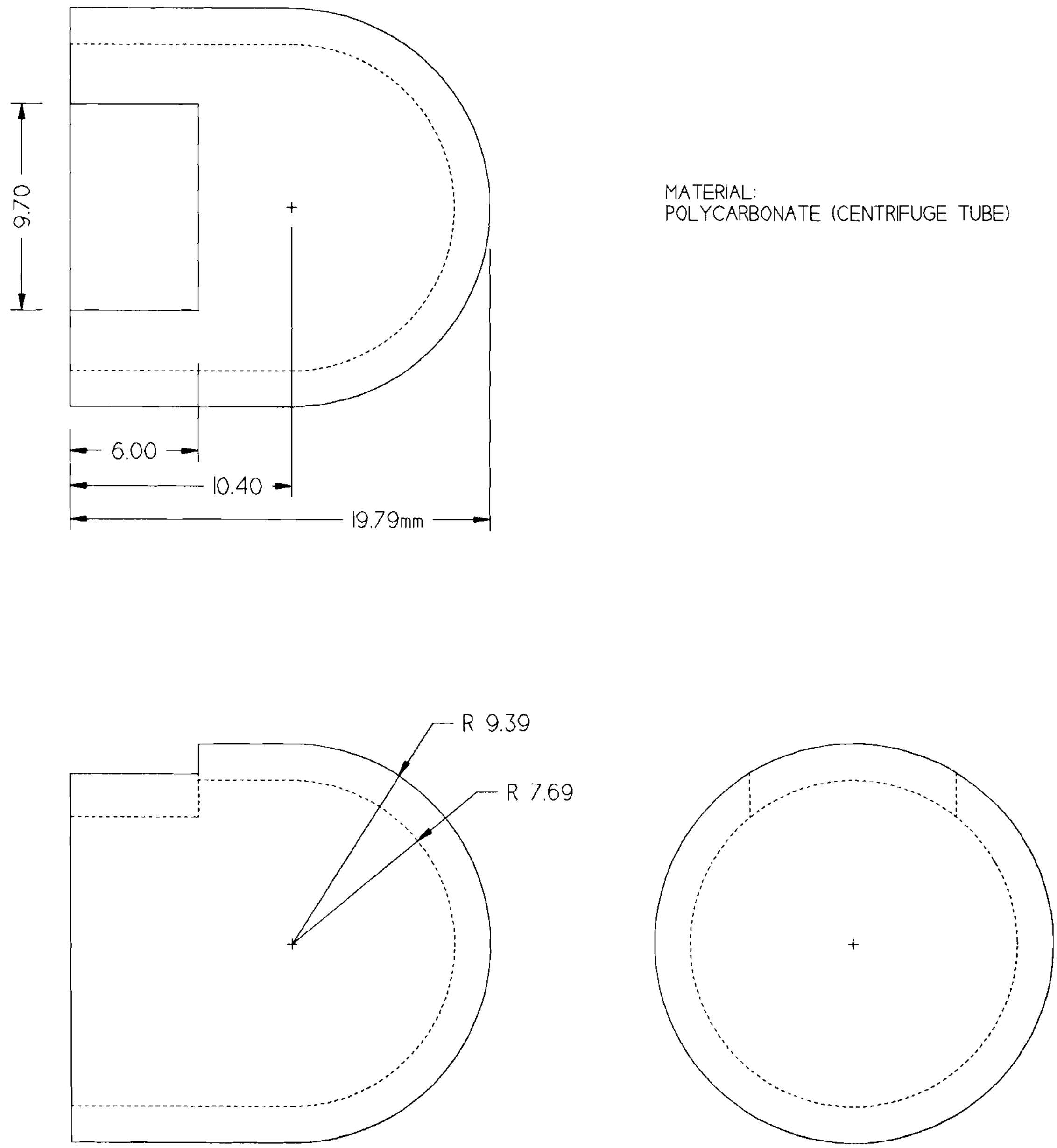

MATERIAL:
POLYCARBONATE (CENTRIFUGE TUBE)

DISTRIBUTION STATEMENT: CONFIDENTIAL AND PROPRIETARY INFORMATION. NOT FOR PUBLIC RELEASE. RESTRICTED DISTRIBUTION.

METRIC THIRD ANGLE PROJECTION	CONTRACT NO. NA9-18558 PH-2 GLOVE CONTR.		BEGEJ CORPORATION			5 CLARET ASH ROAD LITTLETON, CO 80127 TEL/FAX: (303) 932-2186
	APPROVALS	DATE	TITLE WAVEGUIDE (INTERNAL ILLUMINATOR)			
TOL: X ±0.1 mm X.X ±0.05mm X.XX ±0.02mm			SIZE:		DWG. NO. TSEN2011.GCD	REV. 28 JAN 1993
	FINAL:		SCALE: 3X		LAYER: 01	SHEET: 1 OF 1

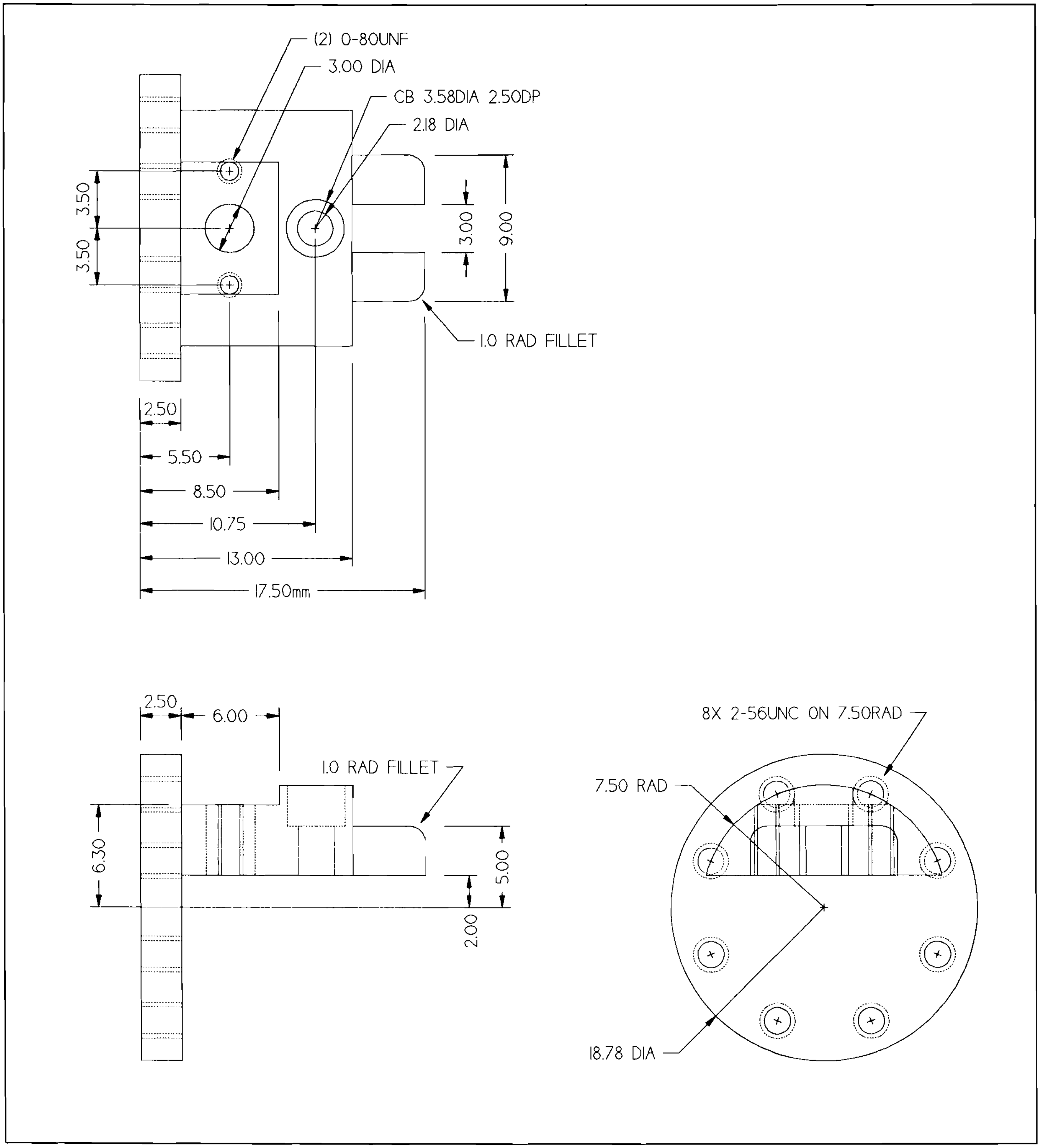

DISTRIBUTION STATEMENT: CONFIDENTIAL AND PROPRIETARY INFORMATION. NOT FOR PUBLIC RELEASE. RESTRICTED DISTRIBUTION.

METRIC

THIRD ANGLE PROJECTION

TOL: X ±0.1 mm
X.X ±0.05mm
X.XX ±0.02mm

CONTRACT NO.
NA9-18558
PH-2 GLOVE CONTR.

BEGEJ CORPORATION

5 CLARET ASH ROAD
LITTLETON, CO 80127
TEL/FAX: (303) 932-2186

APPROVALS	DATE
FINAL:	

TITLE TACTILE SENSOR CORE

SIZE:

SCALE:

DWG. NO. TSEN2010.GCD

LAYER: 010

REV. 11 JAN 93

SHEET: 1 OF 1

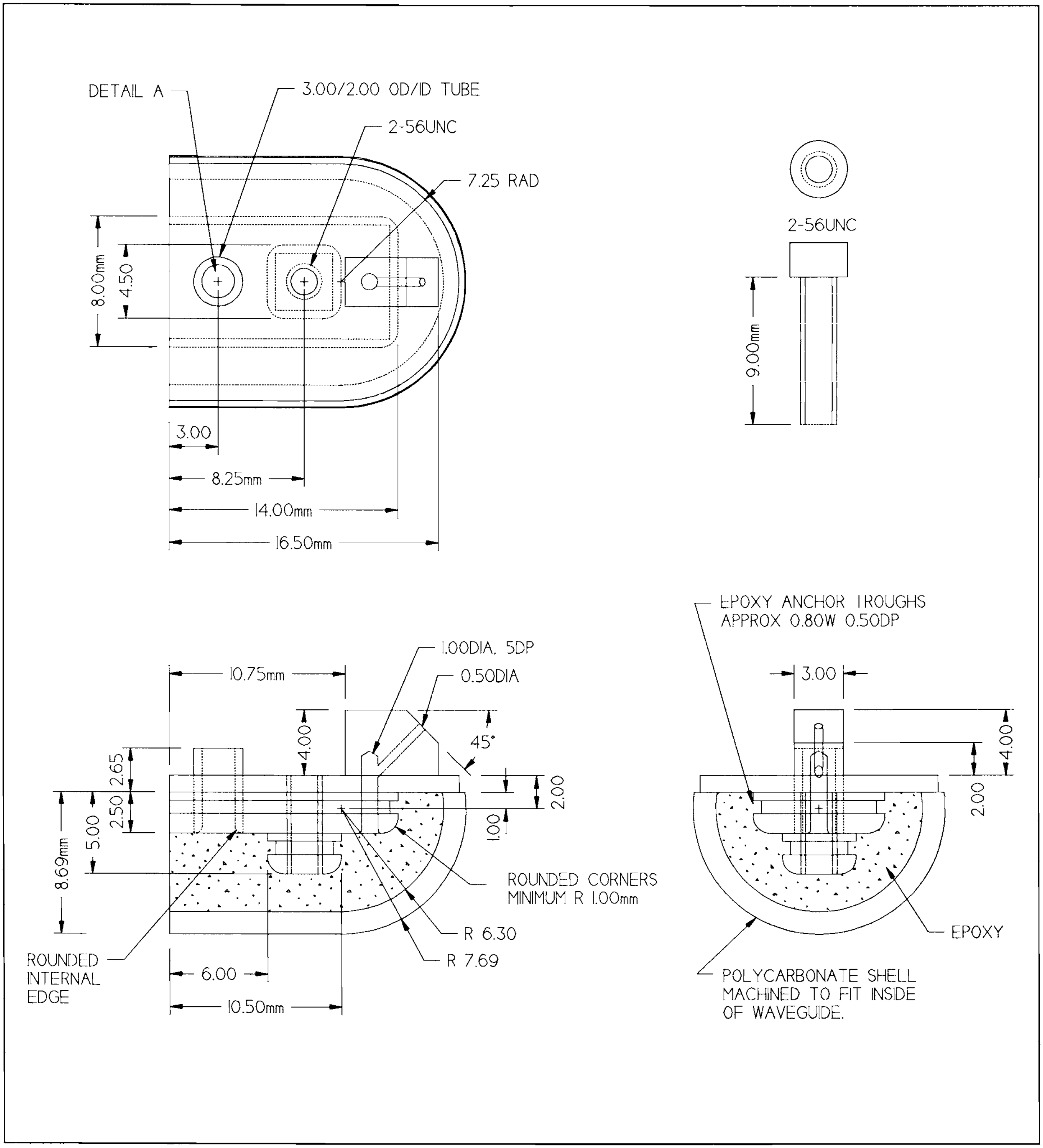

DISTRIBUTION STATEMENT: CONFIDENTIAL AND PROPRIETARY INFORMATION. NOT FOR PUBLIC RELEASE. RESTRICTED DISTRIBUTION.

METRIC

THIRD ANGLE PROJECTION

TOL: X ±0.1 mm
X.X ±0.05mm
X.XX ±0.02mm

CONTRACT NO.
NA9-18558
PH-2 GLOVE CONTR.

BEGEJ CORPORATION

5 CLARET ASH ROAD
LITTLETON, CO 80127
TEL/FAX: (303) 932-2186

APPROVALS	DATE
FINAL:	

TITLE INPUT FIBER ARRAY ASSEMBLY

SIZE:

DWG. NO. TSEN2012.GCD

REV. 1 JAN 93

SCALE: 3X

LAYER: 012

SHEET: 1 OF 1

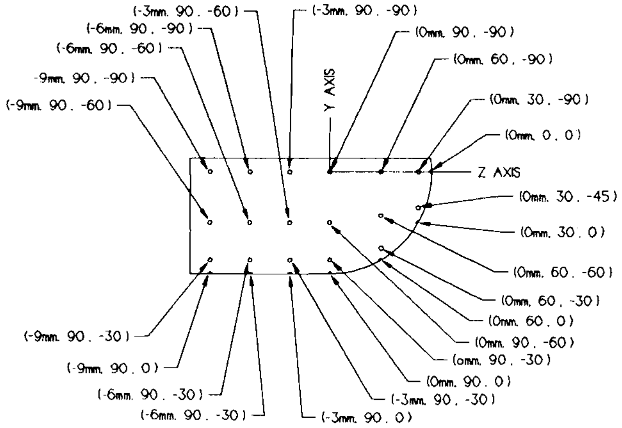

FRONT VIEW

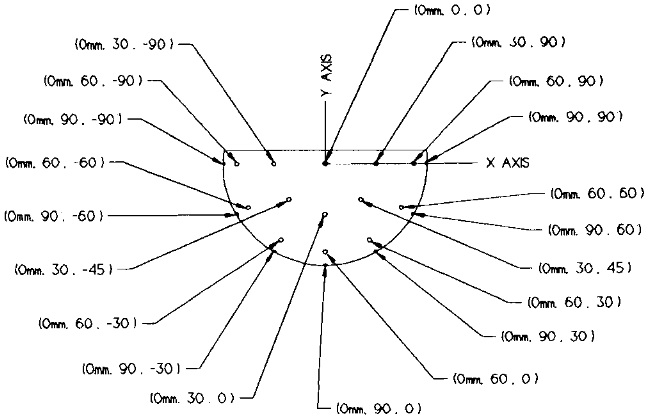

RIGHT VIEW

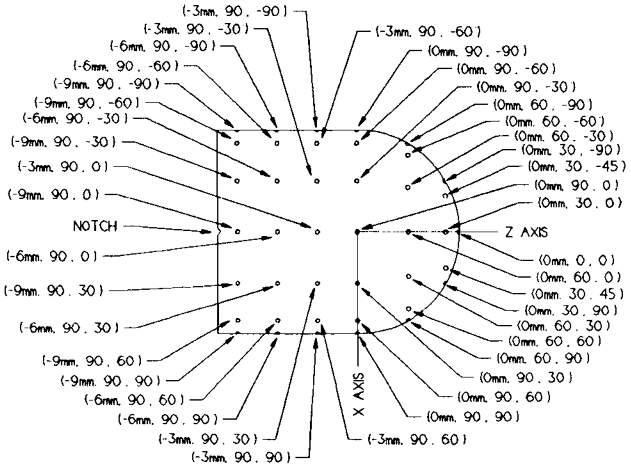

BOTTOM VIEW

(41) HOLES IN INPUT ARRAY SUBSTRATE. 0.32mm DIA.

NOTE: PRIOR TO DILLING.
FIT INPUT ARRAY TO ACTUAL WAVEGUIDE FIRST.
THEN TRANSFER HEMISPHERE CENTER LOCATION
FROM WG TO IA (VIA MOLD DIVIDING LINE).
OTHERWISE. FINAL SENSOR WILL BE APPROX 1mm SHORT.

DISTRIBUTION STATEMENT: CONFIDENTIAL AND PROPRIETARY INFORMATION. NOT FOR PUBLIC RELEASE. RESTRICTED DISTRIBUTION.

METRIC
THIRD ANGLE PROJECTION
TOL: X ±0.1 mm
X.X ±0.05mm
X.XX ±0.02mm

CONTRACT NO.
NA9-18558
PH-2 GLOVE CONTR.

BEGEJ CORPORATION
5 CLARET ASH ROAD
LITTLETON. CO 80127
TEL/FAX: (303) 932-2186

APPROVALS	DATE	TITLE INPUT FIBER ARRAY HOLE LOCATIONS			
		SIZE:		DWG. NO. TSEN2012.GCD	REV. 11 JAN 93
FINAL:		SCALE: 1.75X		LAYER: 012	SHEET: 1 OF 1

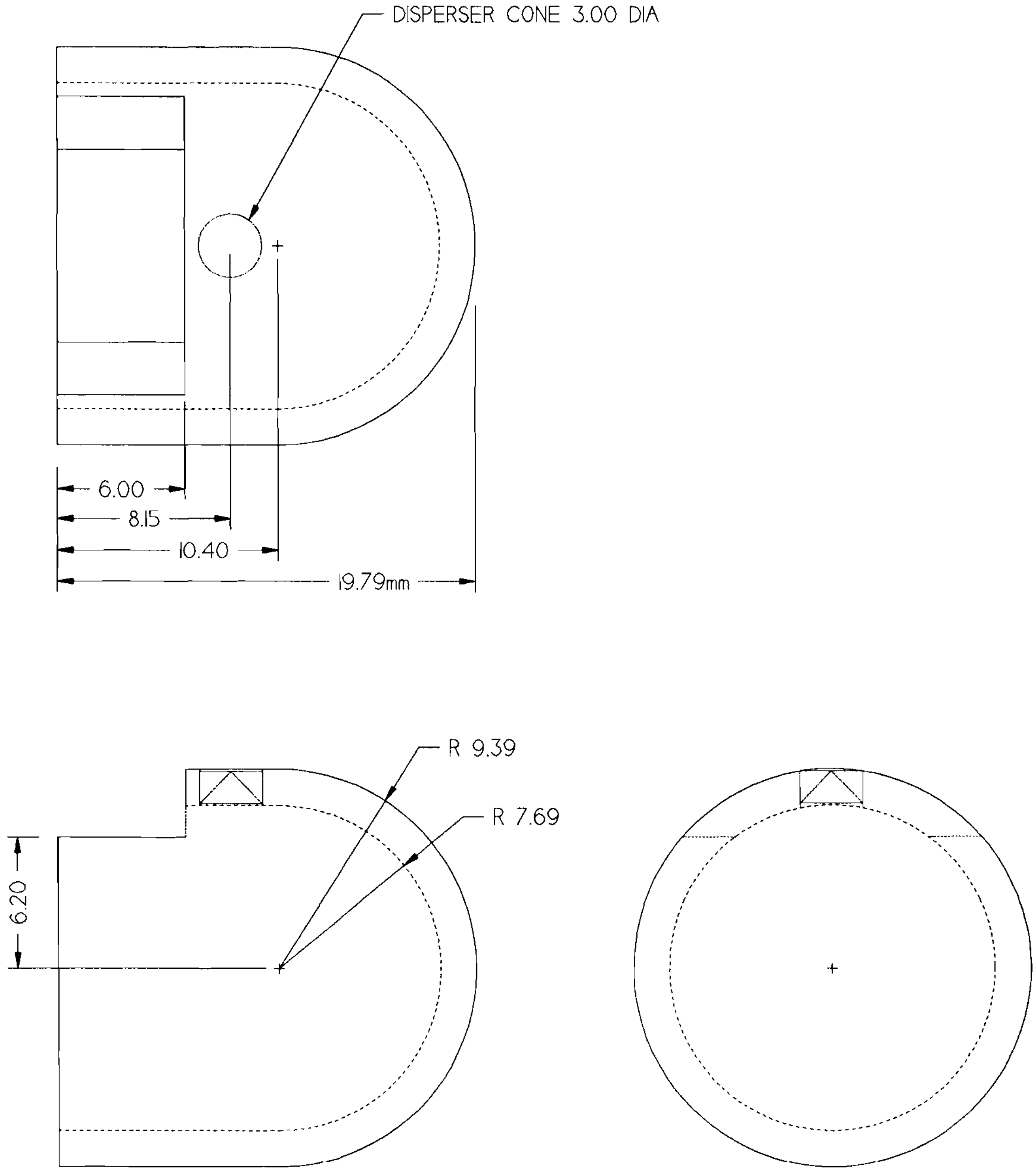

DISTRIBUTION STATEMENT: CONFIDENTIAL AND PROPRIETARY INFORMATION. NOT FOR PUBLIC RELEASE. RESTRICTED DISTRIBUTION.

METRIC

THIRD ANGLE PROJECTION

TOL:
X ±0.1 mm
X.X ±0.05mm
X.XX ±0.02mm

CONTRACT NO.
NA9-18558
PH-2 GLOVE CONTR.

APPROVALS	DATE
FINAL:	

BEGEJ CORPORATION

5 CLARET ASH ROAD
LITTLETON. CO 80127
TEL/FAX: (303) 932-2186

TITLE
WAVEGUIDE (EXTERNAL ILLUMINATOR)

SIZE:
SCALE: 3X
DWG. NO. TSEN2011.GCD
LAYER: 011
REV. 05 JAN 1993
SHEET: 1 OF 1

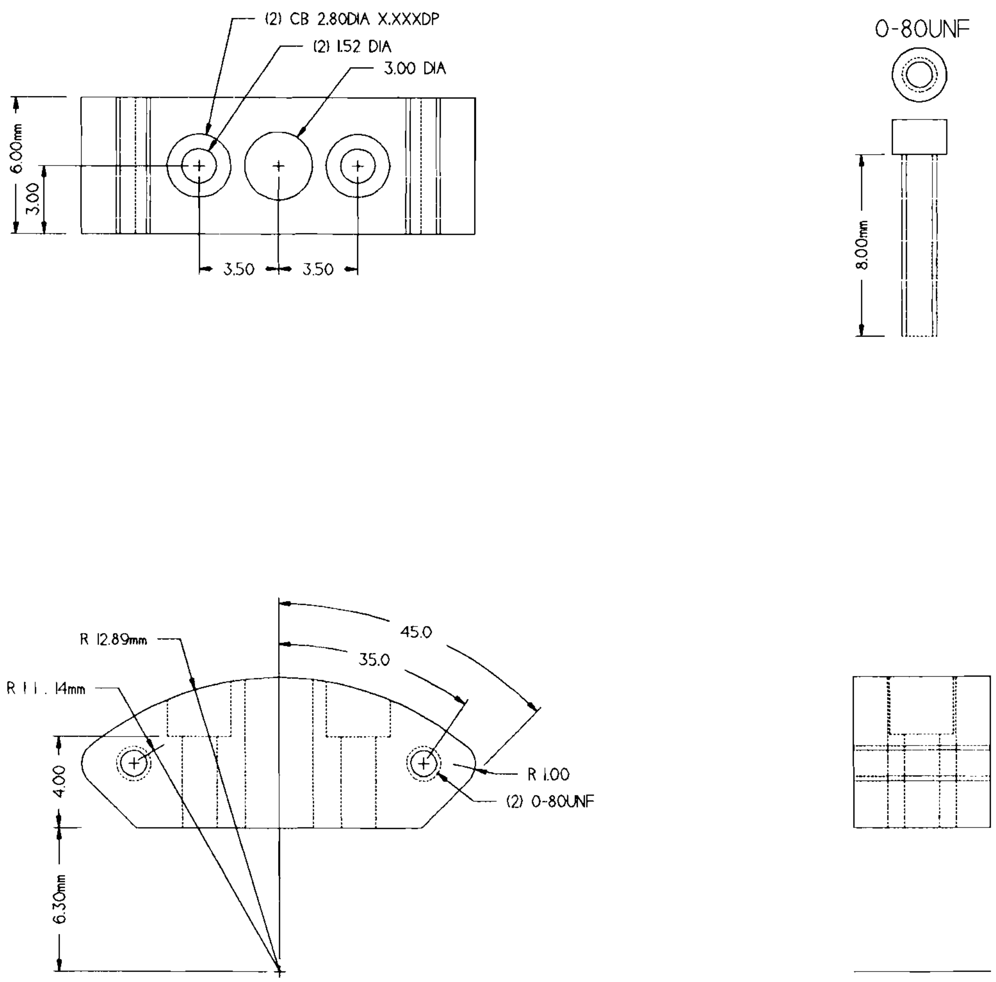

DISTRIBUTION STATEMENT: CONFIDENTIAL AND PROPRIETARY INFORMATION. NOT FOR PUBLIC RELEASE. RESTRICTED DISTRIBUTION.

METRIC

THIRD ANGLE PROJECTION

TOL: X ±0.1 mm
X.X ±0.05mm
X.XX ±0.02mm

CONTRACT NO.
NA9-18558
PH-2 GLOVE CONTR.

APPROVALS	DATE
FINAL:	

BEGEJ CORPORATION

5 CLARET ASH ROAD
LITTLETON, CO 80127
TEL/FAX: (303) 932-2186

TITLE IMAGING FIBER CONNECTOR (VER 1: EXT. ILLUM.)

SIZE:		DWG. NO. TSEN2013.GCD	REV. 04 JAN 1993
SCALE: 3X		LAYER: 013	SHEET: 1 OF 1

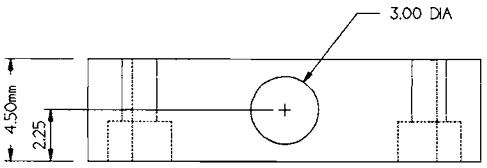

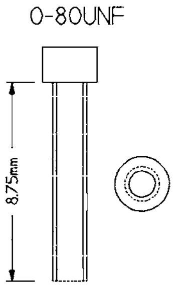

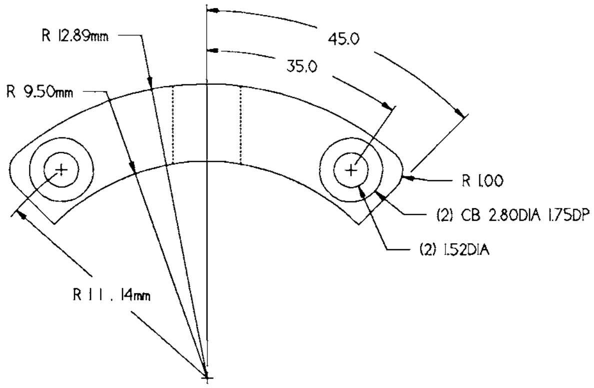

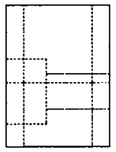

QTY	PART/ID NO.	NOMENCLATURE OR DESCRIPTION	MATERIAL SPECIFICATION	ITEM NO.

PARTS LIST

DISTRIBUTION STATEMENT: CONFIDENTIAL AND PROPRIETARY INFORMATION. NOT FOR PUBLIC RELEASE. RESTRICTED DISTRIBUTION.

METRIC

THIRD ANGLE PROJECTION

TOL:
X ±0.1 mm
X.X ±0.05mm
X.XX ±0.02mm

CONTRACT NO.
NA9-18558
PH-2 GLOVE CONTR.

BEGEJ CORPORATION

5 CLARET ASH ROAD
LITTLETON, CO 80127
TEL/FAX: (303) 932-2186

APPROVALS	DATE
FINAL:	

TITLE ILLUMINATION CABLE CONNECTOR (VER. 1)

SIZE:

DWG. NO. TSEN2018.GCD

REV. 05 JAN 93

SCALE: 3X

LAYER: 000

SHEET: 1 OF 1

APPENDIX F

MECHANICAL DRAWINGS of the TACTILE DISPLAY DRIVER COMPONENTS

The following 31 pages contain detailed mechanical drawings describing the three tactile display driver modules that were fabricated on this program and illustrated in Figure 36. See Appendix G for drawings describing the modifications that must be made to upgrade the modules to include the PCB-version of the PWM controller/driver card.

NOTES:
1. X
2. X
3. X
4. X

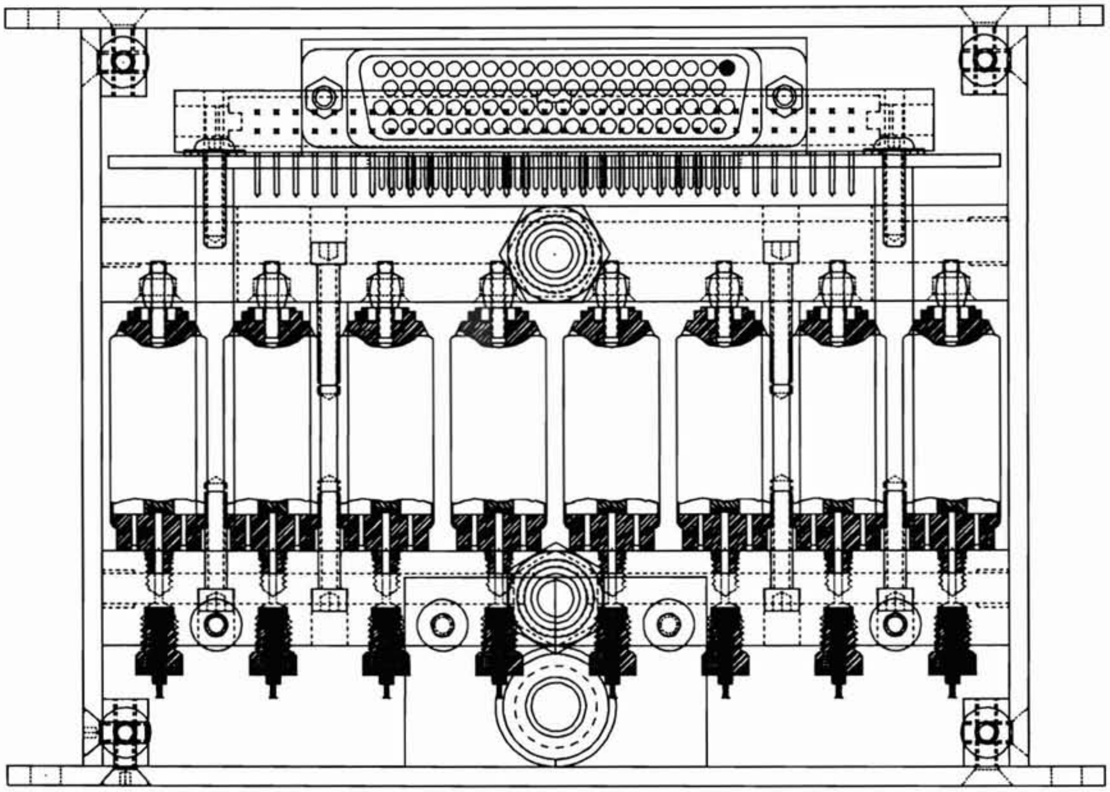

FRONT

DISTRIBUTION STATEMENT: CONFIDENTIAL AND PROPRIETARY INFORMATION. NOT FOR PUBLIC RELEASE. RESTRICTED DISTRIBUTION.

METRIC THIRD ANGLE PROJECTION	CONTRACT NO. NA9-18558 PH-2 GLOVE CONTR.		BEGEJ CORPORATION			5 CLARET ASH ROAD LITTLETON, CO 80127 TEL/FAX: (303) 932-2186
	APPROVALS	DATE	TITLE	TACTILE DRIVER ASSEMBLY (48 TAXELS)		
TOL: X ±0.1 mm X.X ±0.05mm X.XX ±0.02mm			SIZE:		DWG. NO. TDRV2002.GCD	REV. 28 JUNE 93
	FINAL:		SCALE:		LAYER: MULTI	SHEET: 1 OF 3

NOTES:
1. X
2. X
3. X
4. X

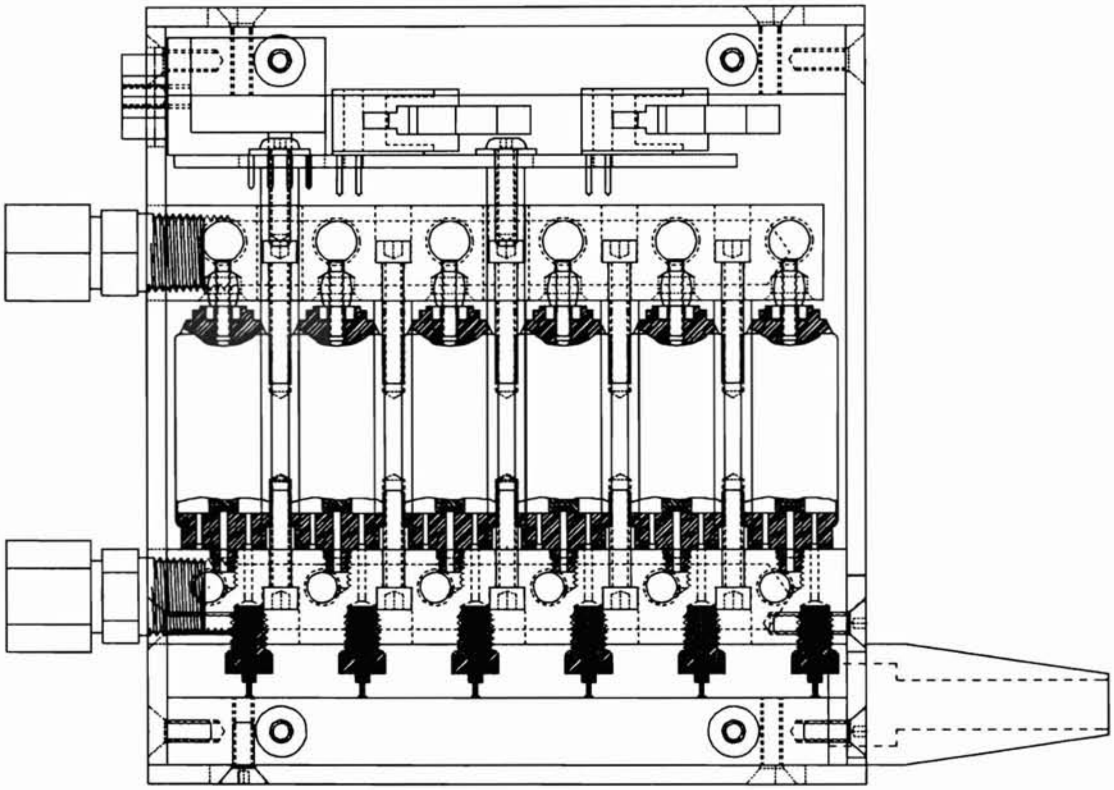

RIGHT

DISTRIBUTION STATEMENT: CONFIDENTIAL AND PROPRIETARY INFORMATION. NOT FOR PUBLIC RELEASE. RESTRICTED DISTRIBUTION.

METRIC THIRD ANGLE PROJECTION	CONTRACT NO. NA9-18558 PH-2 GLOVE CONTR.		BEGEJ CORPORATION			5 CLARET ASH ROAD LITTLETON, CO 80127 TEL/FAX: (303) 932-2186
	APPROVALS	DATE	TITLE TACTILE DRIVER ASSEMBLY (48 TAXELS)			
TOL: X ±0.1 mm X.X ±0.05mm X.XX ±0.02mm			SIZE:		DWG. NO. TDRV2002.GCD	REV. 28 JUNE 93
	FINAL:		SCALE:		LAYER: MULTI	SHEET: 2 OF 3

NOTES:
1. X
2. X
3. X
4. X

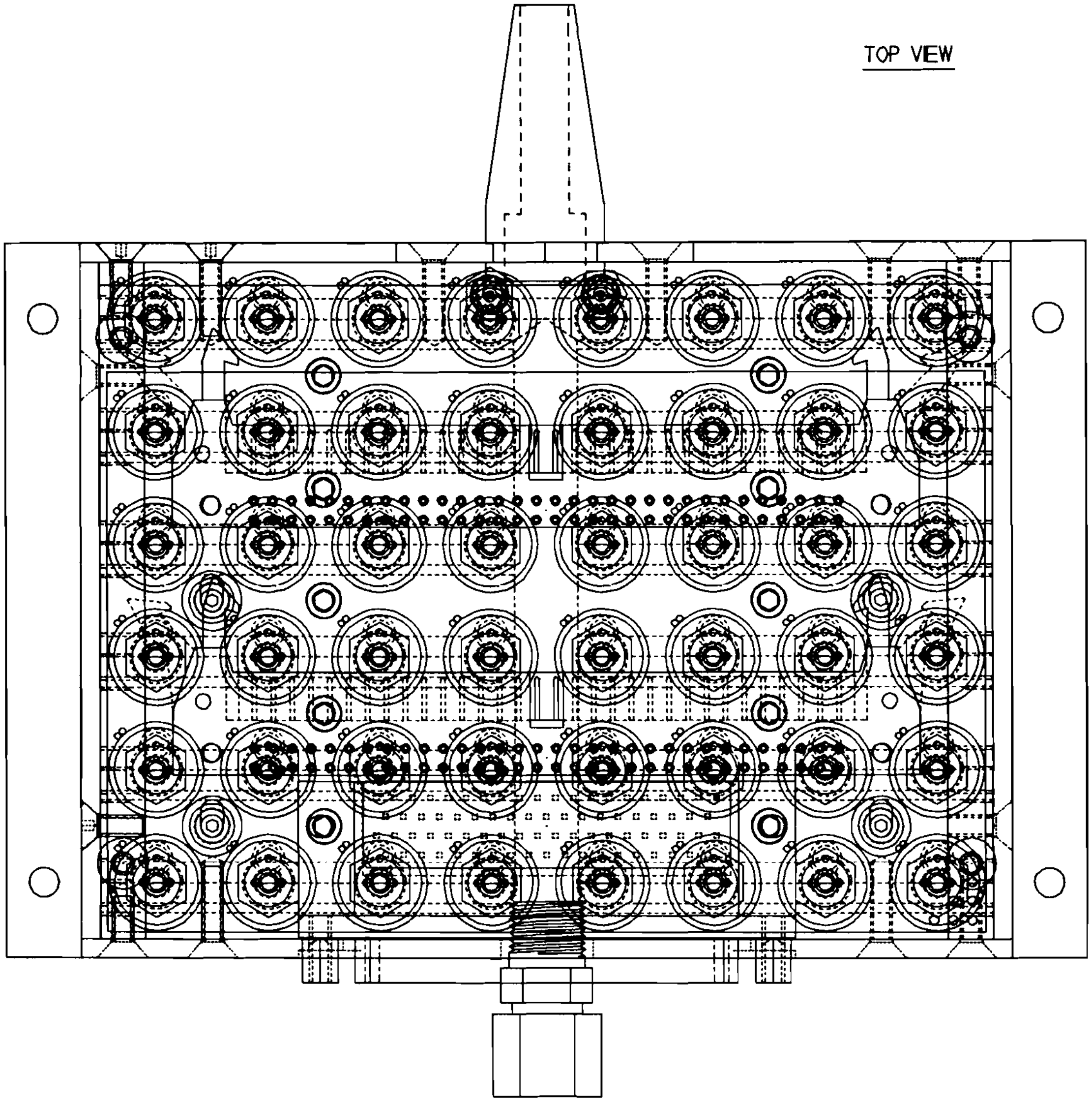

DISTRIBUTION STATEMENT: CONFIDENTIAL AND PROPRIETARY INFORMATION. NOT FOR PUBLIC RELEASE. RESTRICTED DISTRIBUTION.

METRIC

THIRD ANGLE PROJECTION

TOL: X ±0.1 mm
X.X ±0.05mm
X.XX ±0.02mm

CONTRACT NO.
NA9-18558
PH-2 GLOVE CONTR.

BEGEJ CORPORATION

5 CLARET ASH ROAD
LITTLETON, CO 80127
TEL/FAX: (303) 932-2186

APPROVALS	DATE
FINAL:	

TITLE
TACTILE DRIVER ASSEMBLY (48 TAXELS)

SIZE:		DWG. NO. TDRV2002.GCD	REV. 28 JUNE 93
SCALE:		LAYER: MULTI	SHEET: 3 OF 3

NOTES:

⚠ 1. FACE ENTIRE TOP SURFACE FOR VALVE O-RING SEALS.

6X CROSS FEEDER LINES
4.04 DIA THRU HOLE. 6 PL EQ SP. 15mm CTR
10-32UNF THREAD BOTH ENDS. 4.0mm DEEP

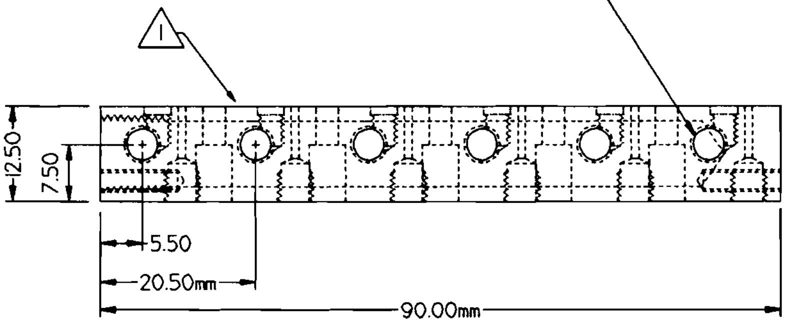

FRONT VIEW

1		MALE CONNECTOR. 1/8"NPT X 1/4"TUBE		
12		SOCKET SET SCREW. 10-32UNF x 4mm (CUSTOM LENGTH)		
1		PRESSURE MANIFOLD. 48 TAXELS.	ALUMINUM. 6061-T6 OR EQUIV.	
QTY	PART/ID NO.	NOMENCLATURE OR DESCRIPTION	MATERIAL SPECIFICATION	ITEM NO.
PARTS LIST				

DISTRIBUTION STATEMENT: CONFIDENTIAL AND PROPRIETARY INFORMATION. NOT FOR PUBLIC RELEASE. RESTRICTED DISTRIBUTION.

METRIC
THIRD ANGLE PROJECTION

TOL: X ±0.1 mm
X.X ±0.05mm
X.XX ±0.02mm

CONTRACT NO.
NA9-18558
PH-2 GLOVE CONTR.

APPROVALS | DATE

FINAL:

BEGEJ CORPORATION

5 CLARET ASH ROAD
LITTLETON. CO 80127
TEL/FAX: (303) 932-2186

TITLE
PRESSURE MANIFOLD FOR DISPLAY DRIVER (48TX)

SIZE:
DWG. NO. TDRV2100
REV. 21 JUNE 93
SCALE:
LAYER: 100
SHEET: 1 OF 4

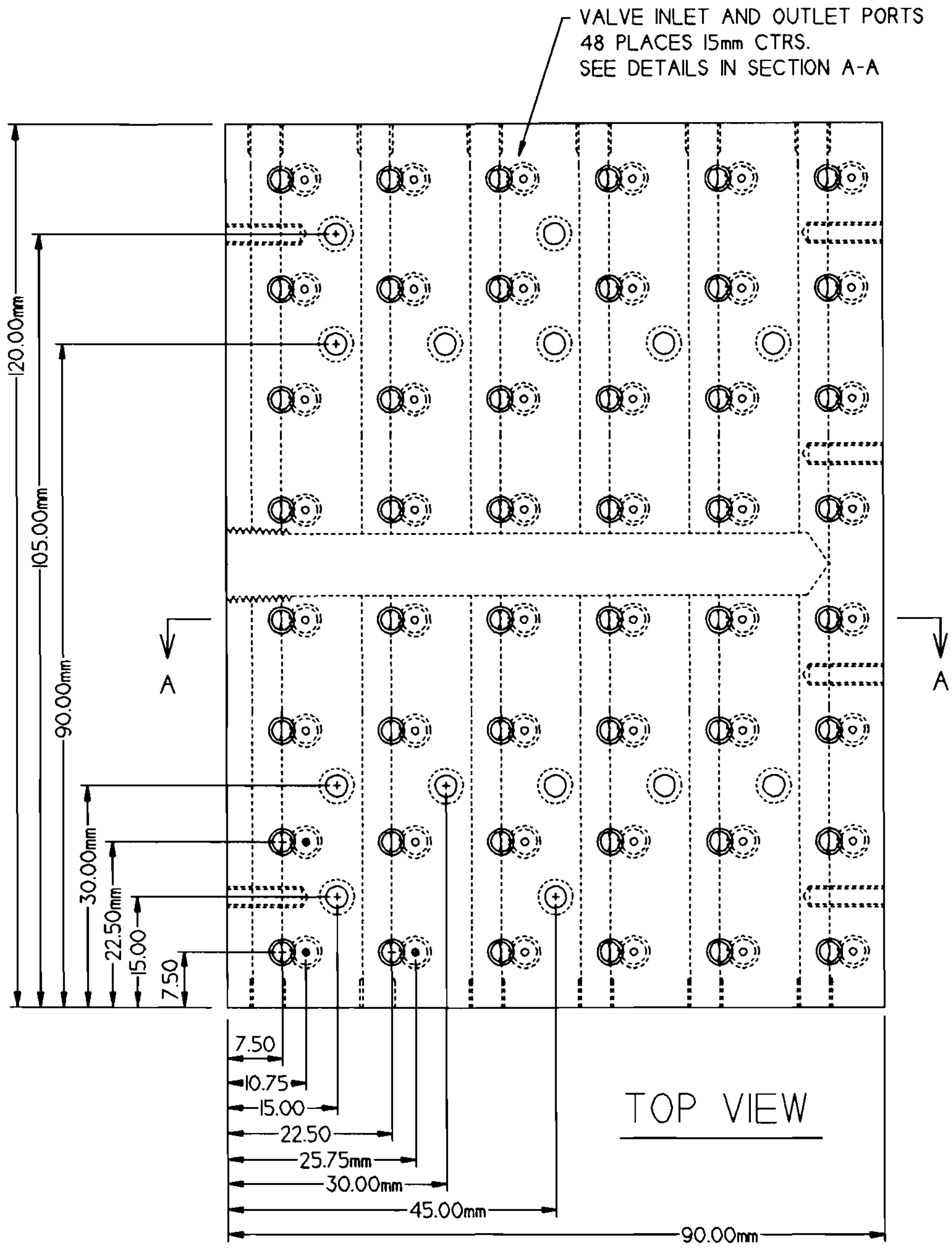

DISTRIBUTION STATEMENT: CONFIDENTIAL AND PROPRIETARY INFORMATION. NOT FOR PUBLIC RELEASE. RESTRICTED DISTRIBUTION.

METRIC
THIRD ANGLE PROJECTION
TOL: X ±0.1 mm
X.X ±0.05mm
X.XX ±0.02mm

CONTRACT NO.
NA9-18558
PH-2 GLOVE CONTR.

APPROVALS
DATE
FINAL:

BEGEJ CORPORATION
5 CLARET ASH ROAD
LITTLETON, CO 80127
TEL/FAX: (303) 932-2186

TITLE
PRESSURE MANIFOLD FOR DISPLAY DRIVER (48TX)

SIZE:
DWG. NO. TDRV2100
REV. 21 JUNE 93
SCALE:
LAYER: 100
SHEET: 2 OF 4

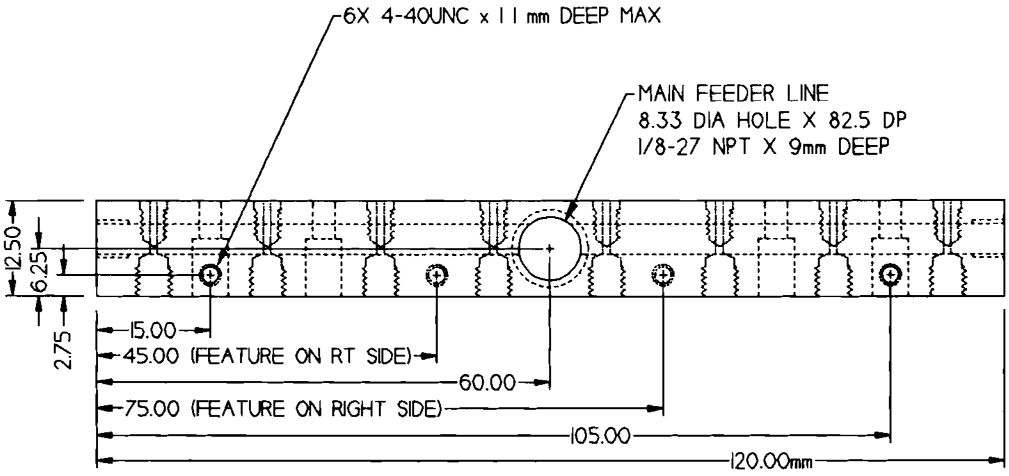

LEFT SIDE-VIEW

DISTRIBUTION STATEMENT: CONFIDENTIAL AND PROPRIETARY INFORMATION. NOT FOR PUBLIC RELEASE. RESTRICTED DISTRIBUTION.

METRIC
THIRD ANGLE PROJECTION

TOL:
X ±0.1 mm
X.X ±0.05mm
X.XX ±0.02mm

CONTRACT NO.
NA9-18558
PH-2 GLOVE CONTR.

BEGEJ CORPORATION

5 CLARET ASH ROAD
LITTLETON, CO 80127
TEL/FAX: (303) 932-2186

APPROVALS	DATE
FINAL:	

TITLE
PRESSURE MANIFOLD FOR DISPLAY DRIVER (48TX)

SIZE:
DWG. NO. TDRV2100
REV. 21 JUNE 93
SCALE:
LAYER: 100
SHEET: 3 OF 4

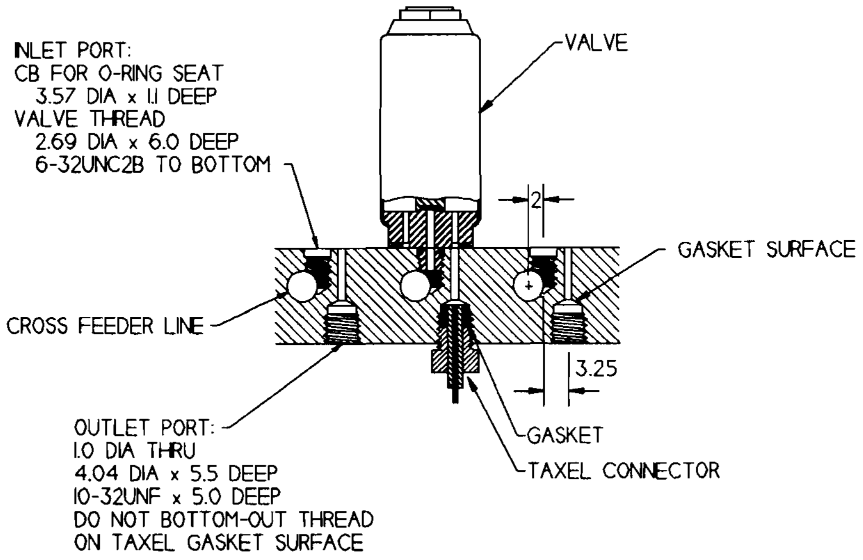

SECTION A-A

DISTRIBUTION STATEMENT: CONFIDENTIAL AND PROPRIETARY INFORMATION. NOT FOR PUBLIC RELEASE. RESTRICTED DISTRIBUTION.

METRIC THIRD ANGLE PROJECTION	CONTRACT NO. NA9-18558 PH-2 GLOVE CONTR.		BEGEJ CORPORATION			5 CLARET ASH ROAD LITTLETON, CO 80127 TEL/FAX: (303) 932-2186
	APPROVALS	DATE	TITLE PRESSURE MANIFOLD FOR DISPLAY DRIVER (48TX)			
TOL: X ±0.1 mm X.X ±0.05mm X.XX ±0.02mm			SIZE:		DWG. NO. TDRV2100	REV. 21 JUNE 93
	FINAL:		SCALE:		LAYER: 100	SHEET: 4 OF 4

6X CROSS FEEDER LINES
5.41 DIA THRU HOLE. 15mm SPACING
1/4-28 UNF THREAD BOTH ENDS. 5.0mm DEEP

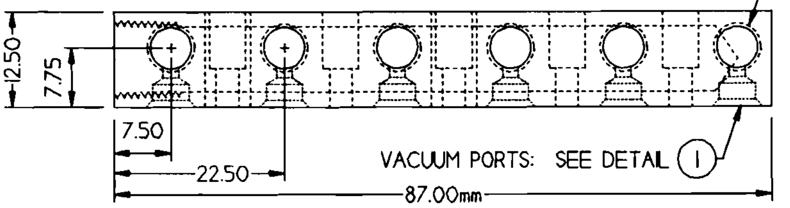

VACUUM PORTS: SEE DETAIL ①

FRONT VIEW

QTY	PART/ID NO.	NOMENCLATURE OR DESCRIPTION	MATERIAL SPECIFICATION	ITEM NO.
1		MALE CONNECTOR. 1/8"NPT X 1/4"TUBE		
12		SOCKET SET SCREWS. 1/4-28UNF X 4.8mm		
1		VACUUM MANIFOLD. 48 TAXELS.	ALUMINUM. 6061-T6 OR EQUIV.	

PARTS LIST

DISTRIBUTION STATEMENT A: CONFIDENTIAL AND PROPRIETARY INFORMATION. NOT FOR PUBLIC RELEASE. RESTRICTED DISTRIBUTION.

METRIC

THIRD ANGLE PROJECTION

TOL: X ±0.1 mm
X.X ±0.05mm
X.XX ±0.02mm

CONTRACT NO.
NA9-18558
PH-2 GLOVE CONTR.

APPROVALS | DATE

FINAL:

BEGEJ CORPORATION

5 CLARET ASH ROAD
LITTLETON. CO 80127
TEL/FAX: (303) 932-2186

TITLE VACUUM MANIFOLD FOR DISPLAY DRIVER (48 TX)

SIZE:

DWG. NO. TDRV2101

REV. 28 JUNE 93

SCALE:

LAYER: 101

SHEET: 1 OF 5

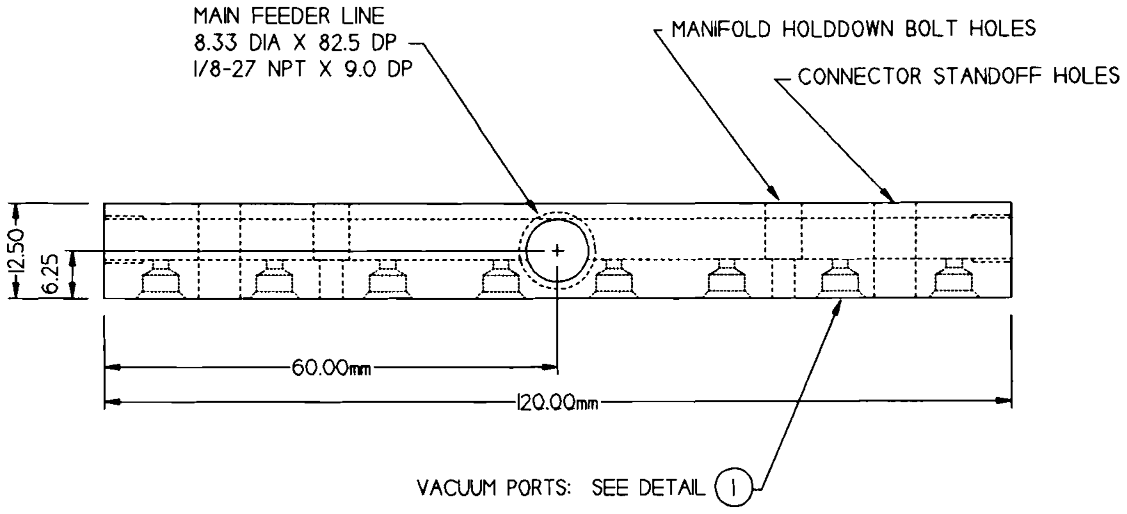

LEFT SIDE-VIEW

DISTRIBUTION STATEMENT A: CONFIDENTIAL AND PROPRIETARY INFORMATION. NOT FOR PUBLIC RELEASE. RESTRICTED DISTRIBUTION.

METRIC

THIRD ANGLE PROJECTION

TOL: X ±0.1 mm
X.X ±0.05mm
X.XX ±0.02mm

CONTRACT NO.
NA9-18558
PH-2 GLOVE CONTR.

APPROVALS | DATE

FINAL:

BEGEJ CORPORATION

5 CLARET ASH ROAD
LITTLETON, CO 80127
TEL/FAX: (303) 932-2186

TITLE VACUUM MANIFOLD FOR DISPLAY DRIVER (48 TX)

SIZE:

SCALE:

DWG. NO. TDRV2101

LAYER: 101

REV. 28 JUNE 93

SHEET: 2 OF 5

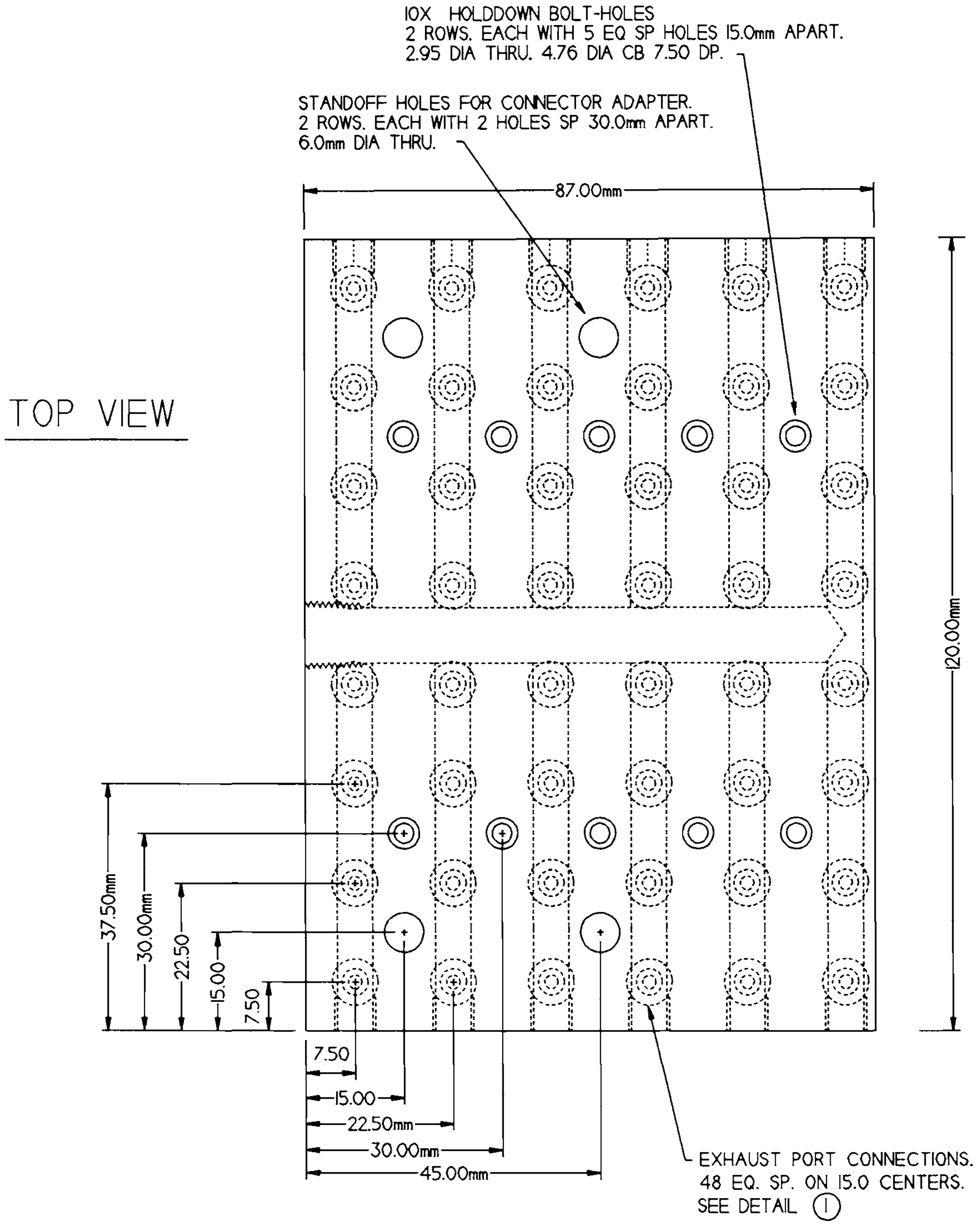

10X HOLDDOWN BOLT-HOLES
2 ROWS. EACH WITH 5 EQ SP HOLES 15.0mm APART.
2.95 DIA THRU. 4.76 DIA CB 7.50 DP.

STANDOFF HOLES FOR CONNECTOR ADAPTER.
2 ROWS. EACH WITH 2 HOLES SP 30.0mm APART.
6.0mm DIA THRU.

EXHAUST PORT CONNECTIONS.
48 EQ. SP. ON 15.0 CENTERS.
SEE DETAIL ①

DISTRIBUTION STATEMENT A: CONFIDENTIAL AND PROPRIETARY INFORMATION. NOT FOR PUBLIC RELEASE. RESTRICTED DISTRIBUTION.

METRIC

THIRD ANGLE PROJECTION

TOL: X ±0.1 mm
X.X ±0.05mm
X.XX ±0.02mm

CONTRACT NO.
NA9-18558
PH-2 GLOVE CONTR.

BEGEJ CORPORATION

5 CLARET ASH ROAD
LITTLETON, CO 80127
TEL/FAX: (303) 932-2186

APPROVALS	DATE
FINAL:	

TITLE VACUUM MANIFOLD FOR DISPLAY DRIVER (48 TX)

SIZE:

DWG. NO. TDRV2101

REV. 28 JUNE 93

SCALE:

LAYER: 101

SHEET: 3 OF 5

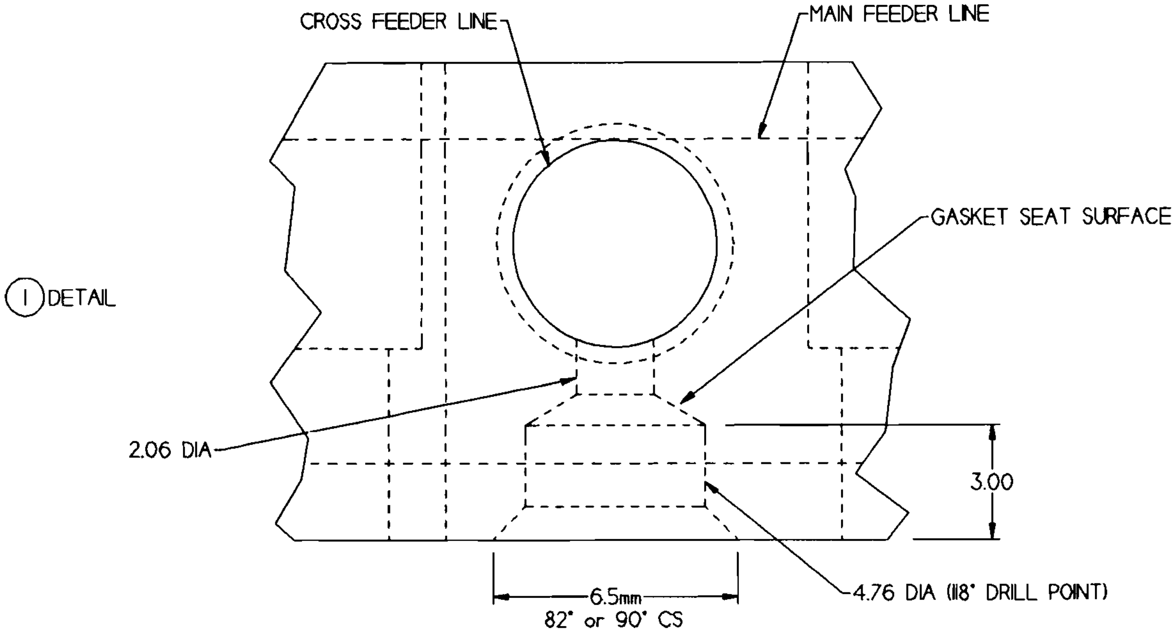

DISTRIBUTION STATEMENT A: CONFIDENTIAL AND PROPRIETARY INFORMATION. NOT FOR PUBLIC RELEASE. RESTRICTED DISTRIBUTION.

METRIC
THIRD ANGLE PROJECTION

TOL: X ±0.1 mm
X.X ±0.05mm
X.XX ±0.02mm

CONTRACT NO.
NA9-18558
PH-2 GLOVE CONTR.

BEGEJ CORPORATION

5 CLARET ASH ROAD
LITTLETON, CO 80127
TEL/FAX: (303) 932-2186

APPROVALS	DATE
FINAL:	

TITLE
VACUUM MANIFOLD FOR DISPLAY DRIVER (48 TX)

SIZE:
DWG. NO. TDRV2101
REV. 24 APR 93
SCALE:
LAYER: 101
SHEET: 4 OF 5

NOTES:
1. MOISTEN INSIDE OF GASKET TO FACILITATE INSERTION OF CORE.

2. BURNISH ENDS OF CORE TUBE WITH WIRE WHEEL TO ROUND AND REMOVE BURRS.

3. ITEM 2 CUT WITH CORE TUBE INSTALLED.

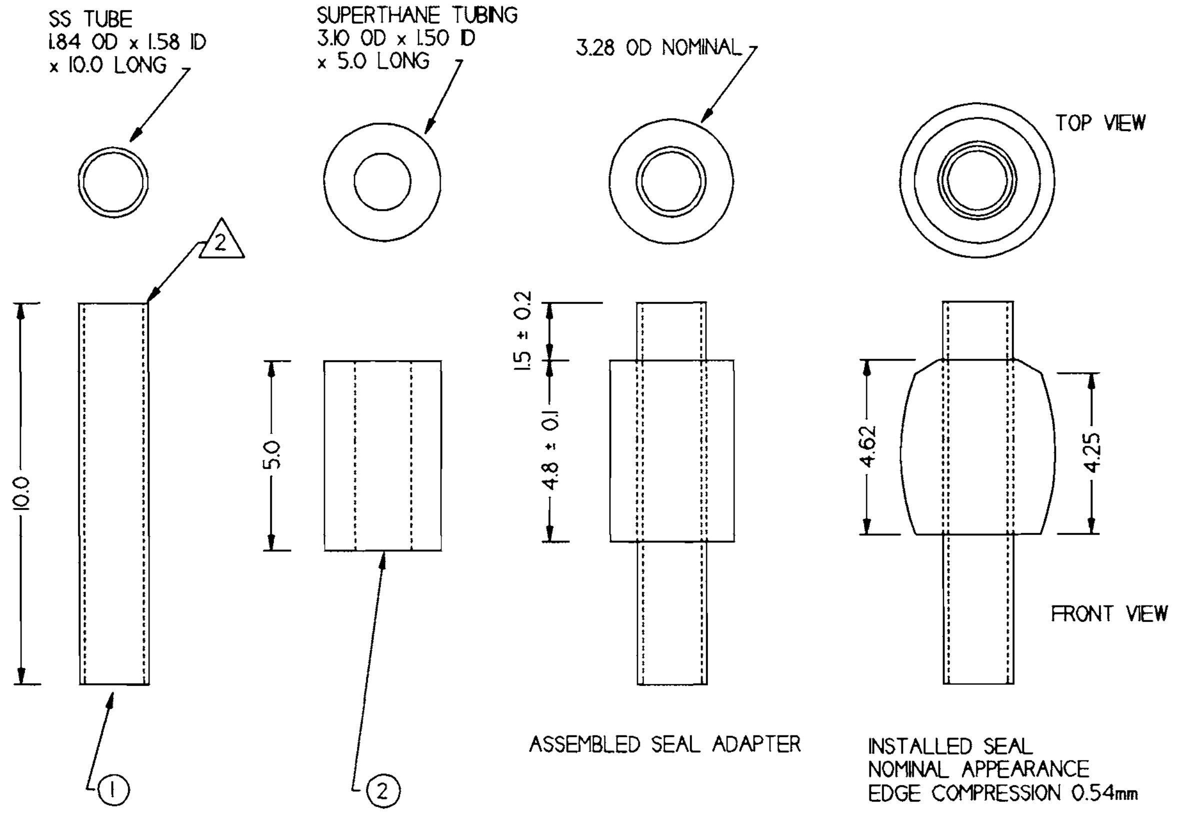

48		ADAPTER SEAL: 3.10 OD x 1.50 ID	SUPERTHANE TUBING. 1/16".	2
48		ADAPTER CORE: 1.84 OD x 1.56 ID x 10.0 L	THIN-WALLED SS TUBE. 15GA	1
QTY	PART/ID NO.	NOMENCLATURE OR DESCRIPTION	MATERIAL SPECIFICATION	ITEM NO.
PARTS LIST				

DISTRIBUTION STATEMENT: CONFIDENTIAL AND PROPRIETARY INFORMATION. NOT FOR PUBLIC RELEASE. RESTRICTED DISTRIBUTION.

METRIC
THIRD ANGLE PROJECTION

CONTRACT NO.
NA9-18558
PH-2 GLOVE CONTR.

BEGEJ CORPORATION
5 CLARET ASH ROAD
LITTLETON. CO 80127
TEL/FAX: (303) 932-2186

APPROVALS
DATE
TITLE
VACUUM SEAL ADAPTER

TOL:
X ±0.1 mm
X.X ±0.05mm
X.XX ±0.02mm

SIZE:
DWG. NO. TDRV2106.GCD
REV. 31 MAY 93
FINAL:
SCALE:
LAYER: 106
SHEET: 1 OF 2

NOTES:

1. JIGGLE TOP MANIFOLD DURING ASSEMBLY TO FACILITATE SEAL SEATING.

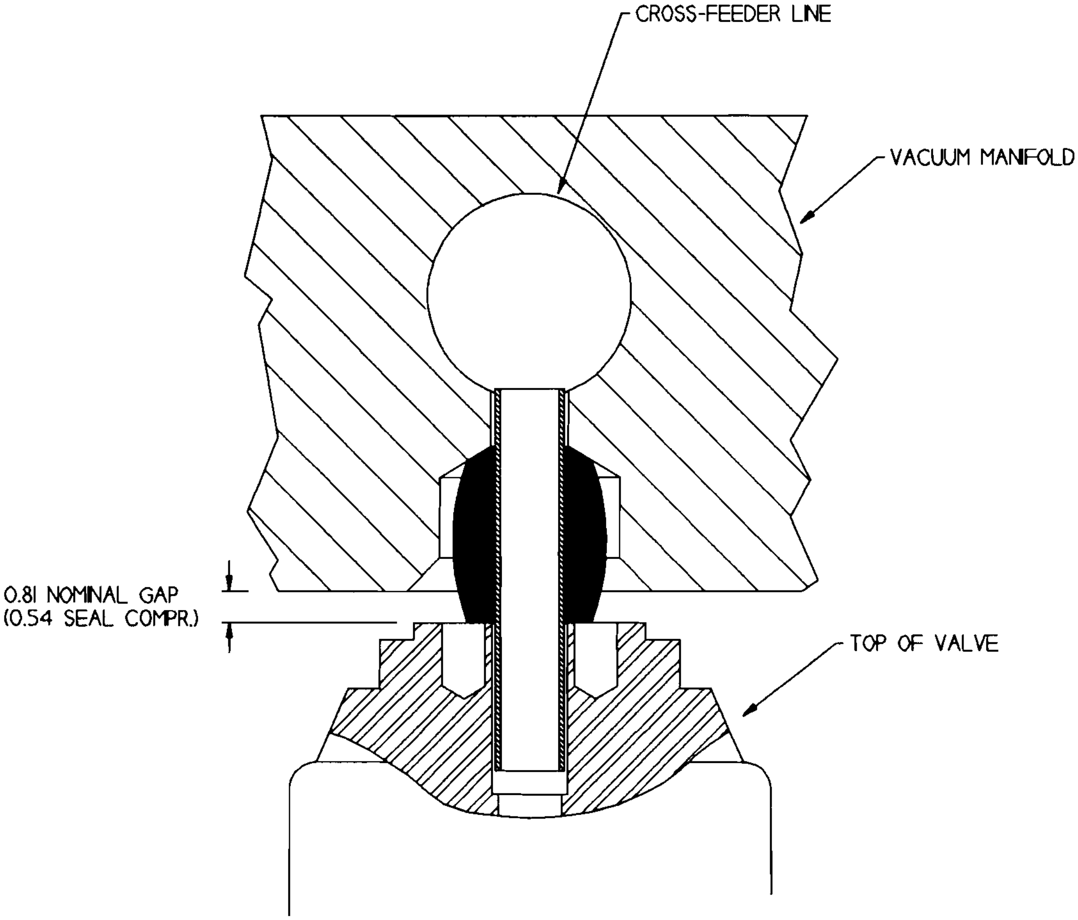

DISTRIBUTION STATEMENT: CONFIDENTIAL AND PROPRIETARY INFORMATION. NOT FOR PUBLIC RELEASE. RESTRICTED DISTRIBUTION.

METRIC
THIRD ANGLE PROJECTION

TOL: X ±0.1 mm
X.X ±0.05mm
X.XX ±0.02mm

CONTRACT NO.
NA9-18558
PH-2 GLOVE CONTR.

BEGEJ CORPORATION

5 CLARET ASH ROAD
LITTLETON, CO 80127
TEL/FAX: (303) 932-2186

APPROVALS	DATE
FINAL:	

TITLE VACUUM SEAL ADAPTER - Assembly Detail

SIZE:

DWG. NO. TDRV2106.GCD

REV. 31 MAY 93

SCALE:

LAYER: 106

SHEET: 2 OF 2

NOTES:
1. CONNECTOR BODY (1) IS A MODIFIED 10-32UNF x 3/32" BARB NYLON ADAPTER.
2. SLIP (ROTATING) FIT REQUIRED BETWEEN CONNECTOR BODY (1) AND ADAPTER TUBE (2).
3. CEMENT ADAPTER TUBE (2) TO SEAL (3) WITH CYANOACRYLATE (CA) ADHESIVE.
4. ATTACH TAXEL TUBE TO ADAPTER TUBE (2) WITH CA ADHESIVE. THEN TRIM INLET END WITH RAZOR.
5. TAXEL TUBING: KYNAR 0.54 OD x 0.25 ID (30AWG WIREWRAP WIRE SHEATH).

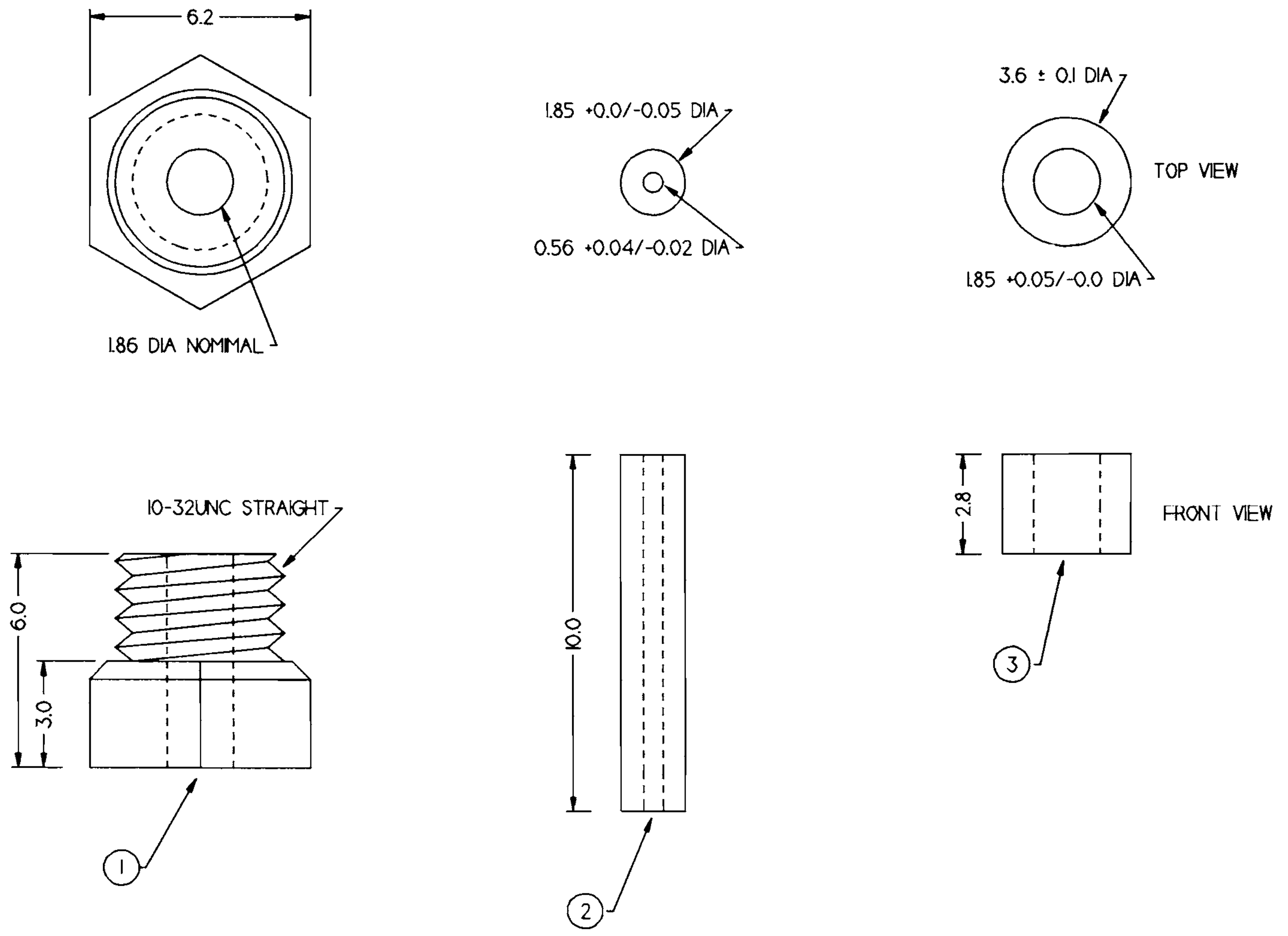

48		SEAL	PVC TUBING	3
48		ADAPTER TUBE	PVC TUBING	2
48		CONNECTOR BODY	HI-TECH CO. SA-220-01 (MOD)	1
QTY	PART/ID NO.	NOMENCLATURE OR DESCRIPTION	MATERIAL SPECIFICATION	ITEM NO.
PARTS LIST				

DISTRIBUTION STATEMENT: CONFIDENTIAL AND PROPRIETARY INFORMATION. NOT FOR PUBLIC RELEASE. RESTRICTED DISTRIBUTION.

METRIC THIRD ANGLE PROJECTION	CONTRACT NO. NA9-18558 PH-2 GLOVE CONTR.		BEGEJ CORPORATION		5 CLARET ASH ROAD LITTLETON, CO 80127 TEL/FAX: (303) 932-2186
	APPROVALS	DATE	TITLE TAXEL CONNECTOR		
TOL: X ±0.1 mm X.X ±0.05mm X.XX ±0.02mm			SIZE:	DWG. NO. TDRV2107.GCD	REV. 25 APR 93
	FINAL:		SCALE:	LAYER: 107	SHEET: 1 OF 3

NOTES:
1. X
2. X
3. X
4. X

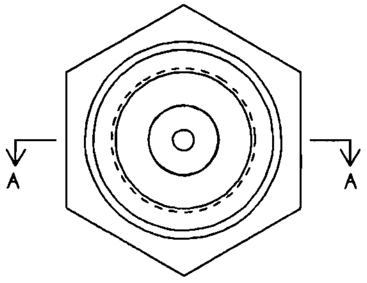

TOP VIEW

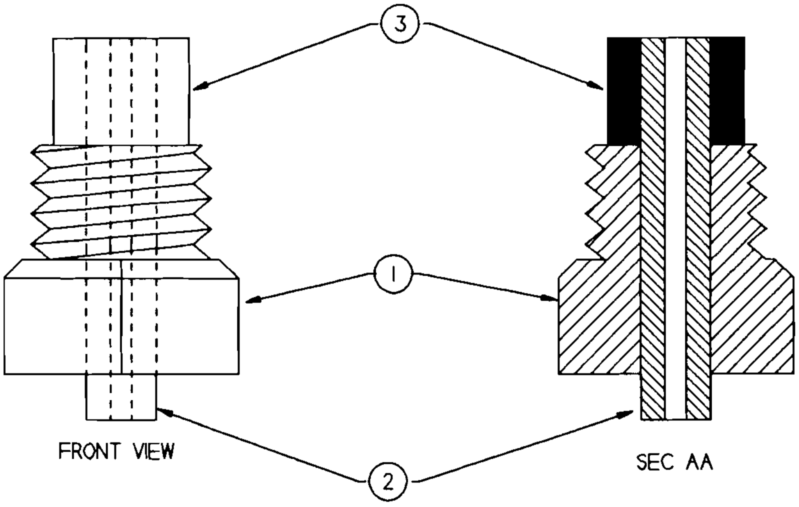

FRONT VIEW

SEC AA

ASSEMBLED CONNECTOR

48		TAXEL CONNECTOR		
QTY	PART/ID NO.	NOMENCLATURE OR DESCRIPTION	MATERIAL SPECIFICATION	ITEM NO.
PARTS LIST				

DISTRIBUTION STATEMENT: CONFIDENTIAL AND PROPRIETARY INFORMATION. NOT FOR PUBLIC RELEASE. RESTRICTED DISTRIBUTION.

METRIC
THIRD ANGLE PROJECTION

TOL: X ±0.1 mm
X.X ±0.05mm
X.XX ±0.02mm

CONTRACT NO.
NA9-18558
PH-2 GLOVE CONTR.

BEGEJ CORPORATION

5 CLARET ASH ROAD
LITTLETON. CO 80127
TEL/FAX: (303) 932-2186

APPROVALS	DATE
FINAL:	

TITLE TAXEL CONNECTOR - Assembly Detail

SIZE:

DWG. NO. TDRV2107.GCD

REV. 25 APR 93

SCALE:

LAYER: 107

SHEET: 2 OF 3

NOTES:
1. X
2. X
3. X
4. X

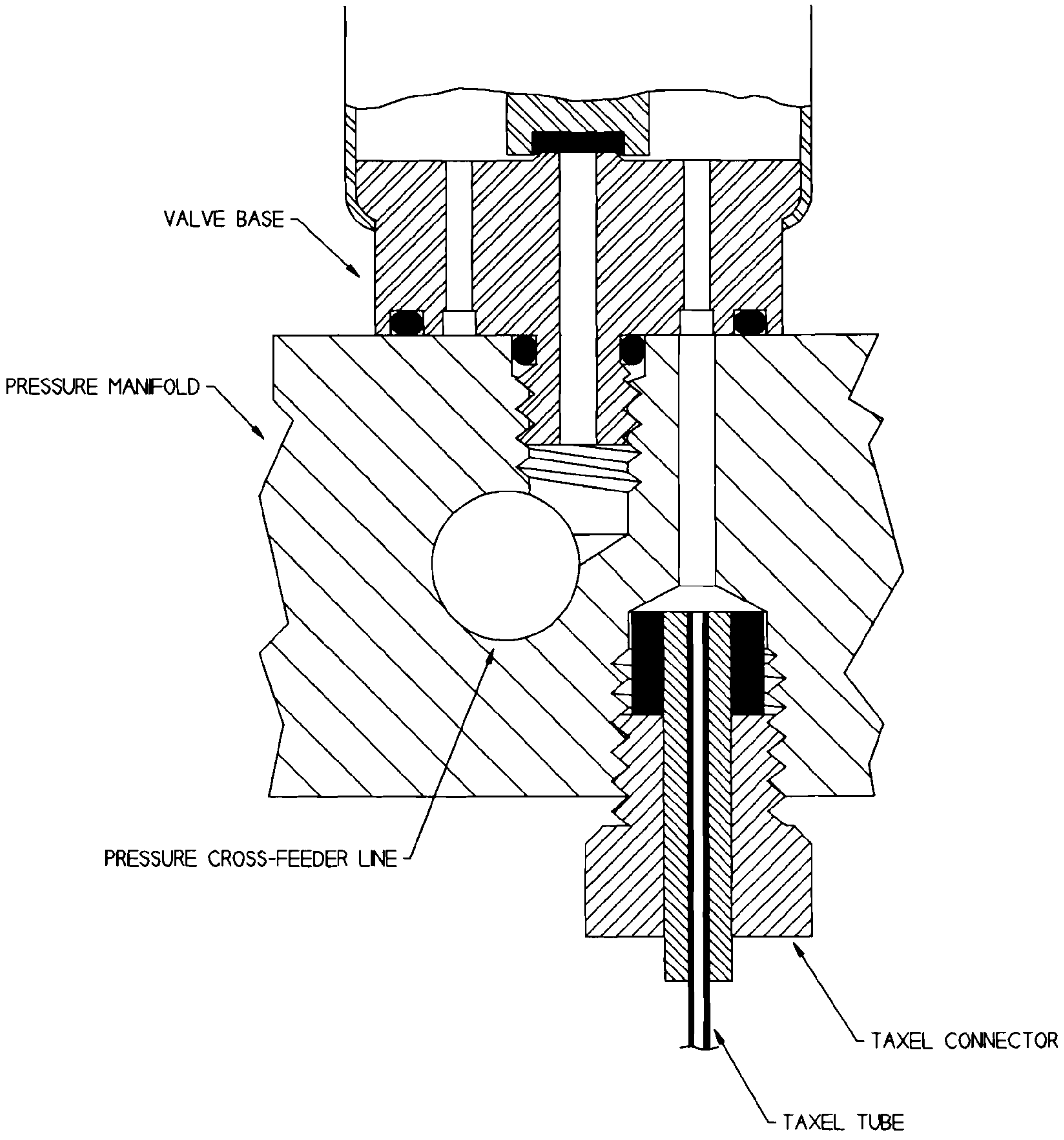

QTY	PART/ID NO.	NOMENCLATURE OR DESCRIPTION	MATERIAL SPECIFICATION	ITEM NO.
PARTS LIST				

DISTRIBUTION STATEMENT: CONFIDENTIAL AND PROPRIETARY INFORMATION. NOT FOR PUBLIC RELEASE. RESTRICTED DISTRIBUTION.

METRIC THIRD ANGLE PROJECTION	CONTRACT NO. NA9-18558 PH-2 GLOVE CONTR.		BEGEJ CORPORATION		5 CLARET ASH ROAD LITTLETON, CO 80127 TEL/FAX: (303) 932-2186
	APPROVALS	DATE	TITLE TAXEL CONNECTOR - Installation Detail		
TOL: X ±0.1 mm X.X ±0.05mm X.XX ±0.02mm			SIZE:	DWG. NO. TDRV2107.GCD	REV. 25 APR 93
	FINAL:		SCALE:	LAYER: 107	SHEET: 3 OF 3

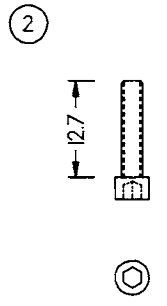

MANIFOLD SCREW

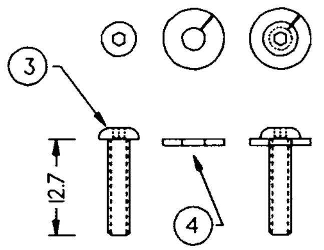

ADAPTER SUBSTRATE
SCREW AND LOCKWASHER

NOTES:
1. NO WASHERS USED ON MANIFOLD BOLTS.
2. 1 mm MAXIMUM SUBSTRATE-BOLT LOCKWASHER THICKNESS.

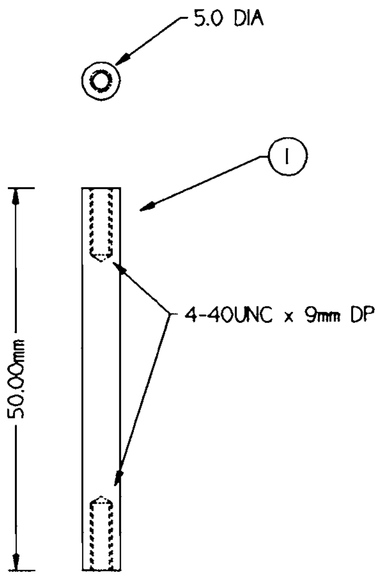

4		CONNECTOR ADAPTER FASTENER: LOCKWASHER. SIZE 4-40UNC. 1mm THK MAX.		4
4		CONNECTOR ADAPTER FASTENER: 4-40UNC x 12.7mm BUTTONHEAD SOCKET SCREWS		3
4		PRESSURE MANIFOLD/CONNECTOR ADAPTER FASTENER: 4-40UNC x 12.7mm SOCKET CAP SCREW		2
4		CONNECTOR ADAPTER STANDOFFS	STEEL	1
QTY	PART/ID NO.	NOMENCLATURE OR DESCRIPTION	MATERIAL SPECIFICATION	ITEM NO.

PARTS LIST

DISTRIBUTION STATEMENT: CONFIDENTIAL AND PROPRIETARY INFORMATION. NOT FOR PUBLIC RELEASE. RESTRICTED DISTRIBUTION.

METRIC
THIRD ANGLE PROJECTION

TOL: X ±0.1 mm
X.X ±0.05mm
X.XX ±0.02mm

CONTRACT NO.
NA9-18558
PH-2 GLOVE CONTR.

APPROVALS | DATE

FINAL:

BEGEJ CORPORATION
5 CLARET ASH ROAD
LITTLETON, CO 80127
TEL/FAX: (303) 932-2186

TITLE
STANDOFFS and BOLTS FOR CONNECTOR ADAPTER

SIZE:
DWG. NO. TDRV2108
REV. 29 JUNE 93
SCALE:
LAYER: 108
SHEET: 1 OF 1

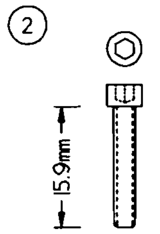

VACUUM
MANIFOLD
SCREW

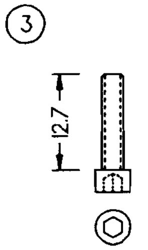

PRESSURE
MANIFOLD
SCREW

NOTES:
1. NO WASHERS USED ON MANIFOLD BOLTS.

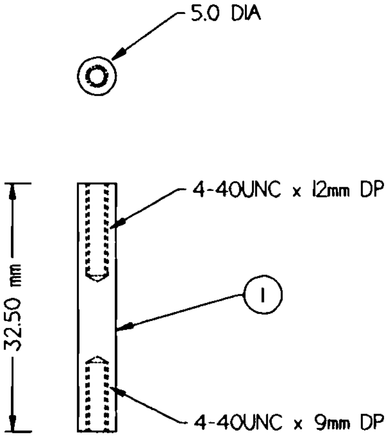

10		PRESSURE MANIFOLD FASTENER: 4-40UNC x 12.7mm SOCKET CAP SCREW		3
10		VACUUM MANIFOLD FASTENER: 4-40UNC x 15.9mm SOCKET CAP SCREW		2
10		THREADED STANDOFFS. 4-40UNC THREADS (VARIABLE DEPTH).	STEEL	1
QTY	PART/ID NO.	NOMENCLATURE OR DESCRIPTION	MATERIAL SPECIFICATION	ITEM NO.
PARTS LIST				

DISTRIBUTION STATEMENT: CONFIDENTIAL AND PROPRIETARY INFORMATION. NOT FOR PUBLIC RELEASE. RESTRICTED DISTRIBUTION.

METRIC
THIRD ANGLE PROJECTION

TOL: X ±0.1 mm
X.X ±0.05mm
X.XX ±0.02mm

CONTRACT NO.
NA9-18558
PH-2 GLOVE CONTR.

BEGEJ CORPORATION

5 CLARET ASH ROAD
LITTLETON, CO 80127
TEL/FAX: (303) 932-2186

APPROVALS	DATE	TITLE STANDOFFS and BOLTS FOR MANIFOLDS
		SIZE:
FINAL:		SCALE:

DWG. NO. TDRV2109
REV. 29 JUNE 93
LAYER: 109
SHEET: 1 OF 1

NOTES:

1. IMPART NON-DIRECTION FINISH WITH "SCOTCHBRITE" PAD. THEN BLUE ANODIZE.
2. ADJUST DIMENSIONS AS NECESSARY DEPENDING ON ACTUAL PLATE THICKNESS T.

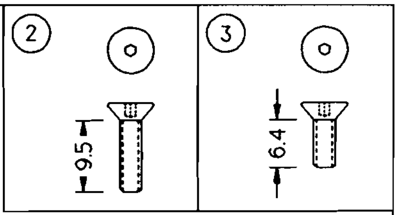

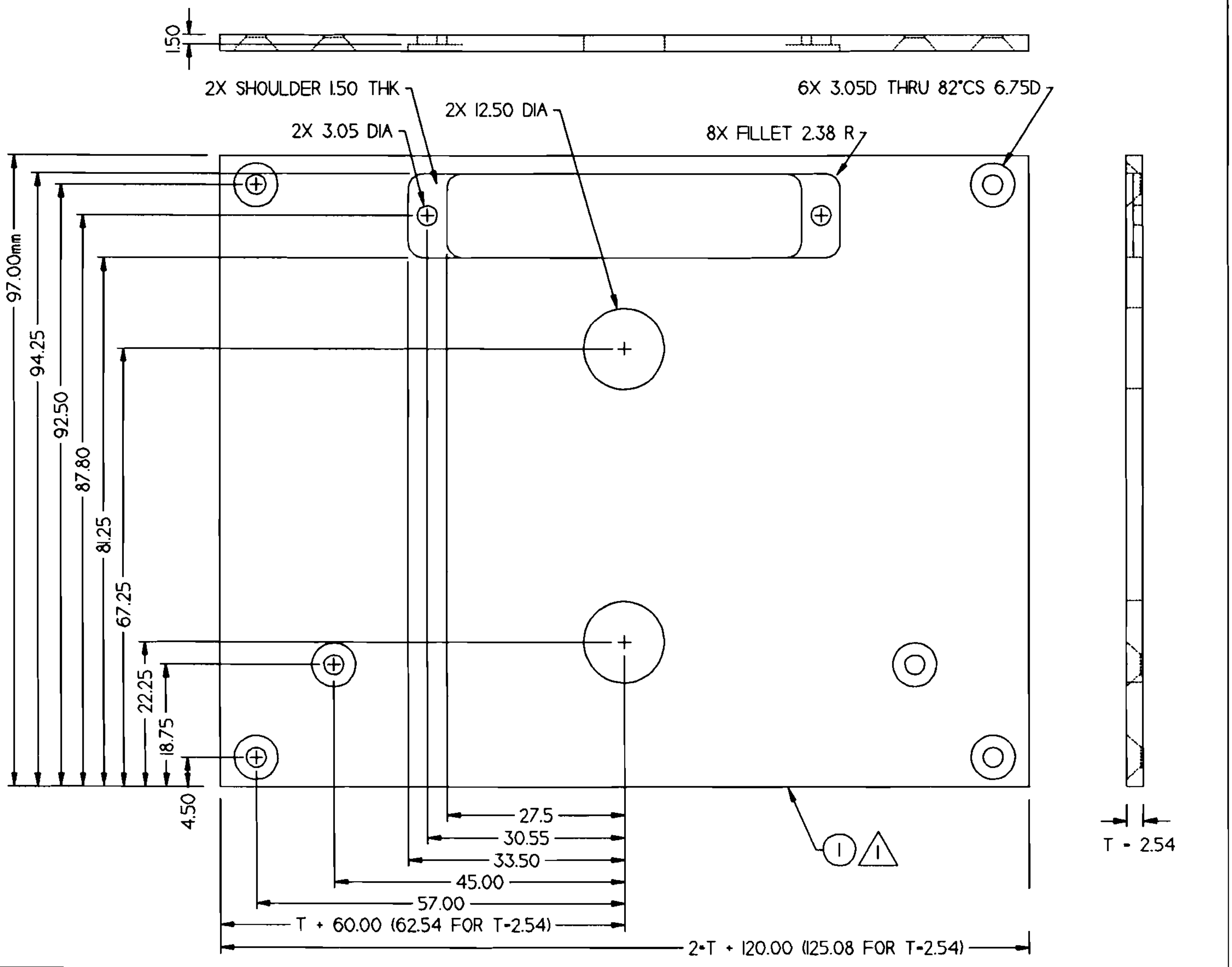

4		ENCLOSURE FASTENER (SHORT): 4-40UNC x 6.4mm FLATHEAD SOCKET SCREW		3
2		ENCLOSURE FASTENER (LONG): 4-40UNC x 9.5mm FLATHEAD SOCKET SCREW		2
1		FRONT PANEL	ALUMINUM, 6061-T6 2.54mm THK	1
QTY	PART/ID NO.	NOMENCLATURE OR DESCRIPTION	MATERIAL SPECIFICATION	ITEM NO.
PARTS LIST				

DISTRIBUTION STATEMENT: CONFIDENTIAL AND PROPRIETARY INFORMATION. NOT FOR PUBLIC RELEASE. RESTRICTED DISTRIBUTION.

METRIC

THIRD ANGLE PROJECTION

TOL: X ±0.1 mm
X.X ±0.05mm
X.XX ±0.02mm

CONTRACT NO.
NA9-18558
PH-2 GLOVE CONTR.

APPROVALS | DATE

FINAL:

BEGEJ CORPORATION

5 CLARET ASH ROAD
LITTLETON, CO 80127
TEL/FAX: (303) 932-2186

TITLE FRONT PANEL AND ATTACHMENT HW

SIZE:

DWG. NO. TDRV210

REV. 28 JUNE 93

SCALE:

LAYER: 110

SHEET: 1 OF 1

NOTES:

1. IMPART NON-DIRECTIONAL FINISH WITH "SCOTCHBRITE" PAD. THEN BLUE ANODIZE.
2. CUTOUT FOR STRAIN-RELIEF RETAINER.

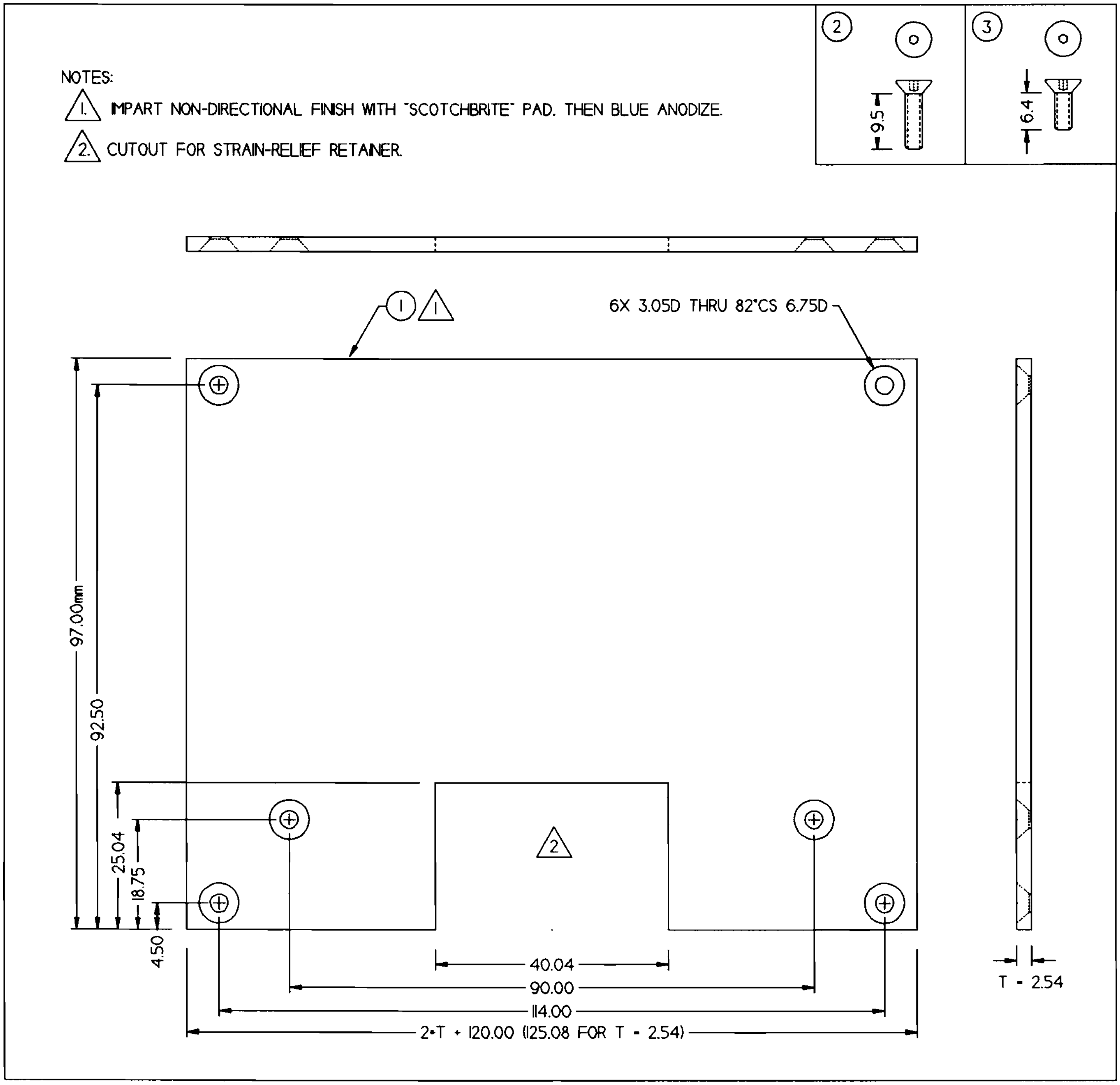

4		ENCLOSURE FASTENER (SHORT): 4-40UNC x 6.4mm FLATHEAD SOCKET SCREW		3
2		ENCLOSURE FASTENER (LONG): 4-40UNC x 9.5mm FLATHEAD SOCKET SCREW		2
1		REAR PANEL	ALUMINUM, 6061-T6 2.54mm THK	1
QTY	PART/ID NO.	NOMENCLATURE OR DESCRIPTION	MATERIAL SPECIFICATION	ITEM NO.

PARTS LIST

DISTRIBUTION STATEMENT: CONFIDENTIAL AND PROPRIETARY INFORMATION. NOT FOR PUBLIC RELEASE. RESTRICTED DISTRIBUTION.

METRIC
THIRD ANGLE PROJECTION

TOL: X ±0.1 mm
X.X ±0.05mm
X.XX ±0.02mm

CONTRACT NO.
NA9-18558
PH-2 GLOVE CONTR.

APPROVALS | DATE
FINAL:

BEGEJ CORPORATION
5 CLARET ASH ROAD
LITTLETON, CO 80127
TEL/FAX: (303) 932-2186

TITLE
REAR PANEL AND ATTACHMENT HW

SIZE:
DWG. NO. TDRV2 111
REV. 22 JUNE 93
SCALE:
LAYER: 111
SHEET: 1 OF 2

NOTES:

⚠ 1. IMPART NON-DIRECTIONAL FINISH WITH "SCOTCHBRITE" PAD. THEN BLUE ANODIZE.

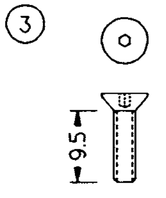

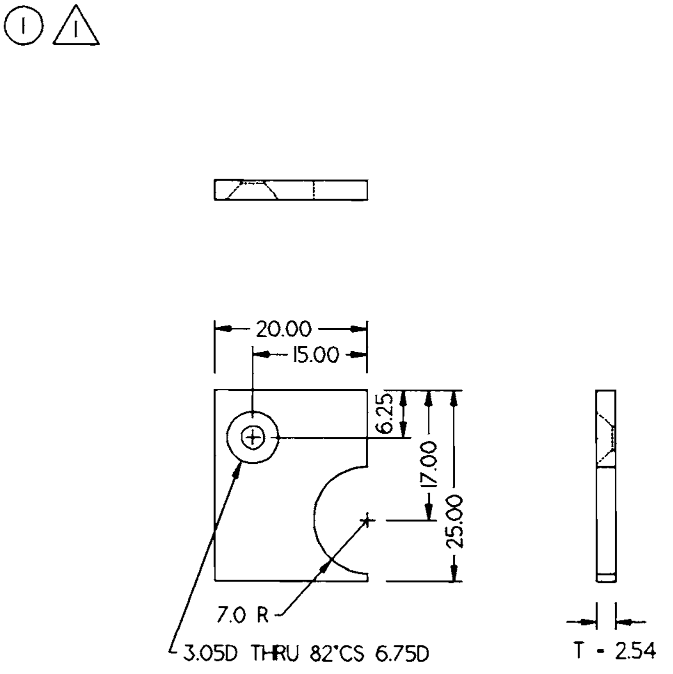

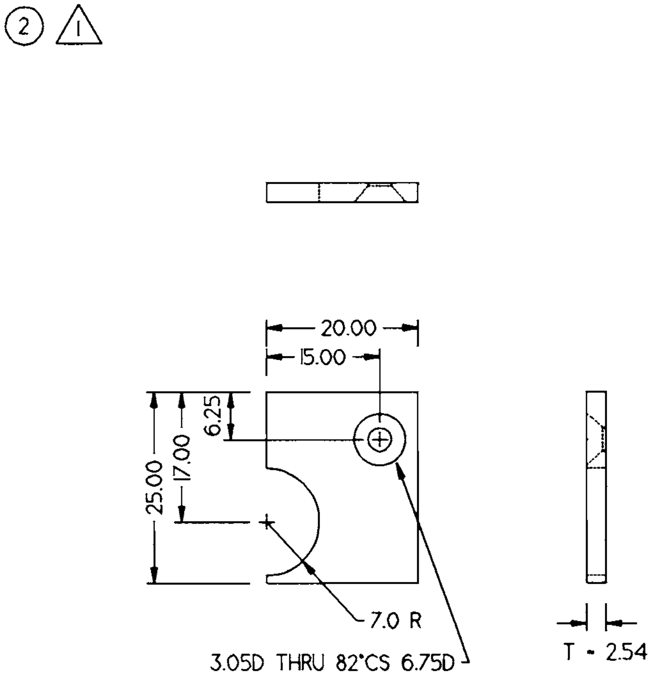

2		STRAIN-RELIEF RETAINER FASTENER: 4-40UNC x 9.5mm FLATHEAD SOCKET SCREW		3
1		STRAIN-RELIEF RETAINER. RIGHT ELEMENT	ALUMINUM. 6061-T6 2.54mm THK	2
1		STRAIN-RELIEF RETAINER. LEFT ELEMENT	ALUMINUM. 6061-T6 2.54mm THK	1
QTY	PART/ID NO.	NOMENCLATURE OR DESCRIPTION	MATERIAL SPECIFICATION	ITEM NO.
PARTS LIST				

DISTRIBUTION STATEMENT: CONFIDENTIAL AND PROPRIETARY INFORMATION. NOT FOR PUBLIC RELEASE. RESTRICTED DISTRIBUTION.

METRIC

THIRD ANGLE PROJECTION

TOL: X ±0.1 mm
X.X ±0.05mm
X.XX ±0.02mm

CONTRACT NO.
NA9-18558
PH-2 GLOVE CONTR.

BEGEJ CORPORATION

5 CLARET ASH ROAD
LITTLETON. CO 80127
TEL/FAX: (303) 932-2186

APPROVALS	DATE
FINAL:	

TITLE
STRAIN-RELIEF RETAINER & ATTACHMENT HW

SIZE:

DWG. NO. TDRV2 1 1 1

REV. 22 JUNE 93

SCALE:

LAYER: 1 1 1

SHEET: 2 OF 2

NOTES:

⚠1 IMPART NON-DIRECTIONAL FINISH WITH "SCOTCHBRITE" PAD. THEN BLUE ANODIZE.

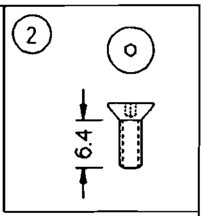

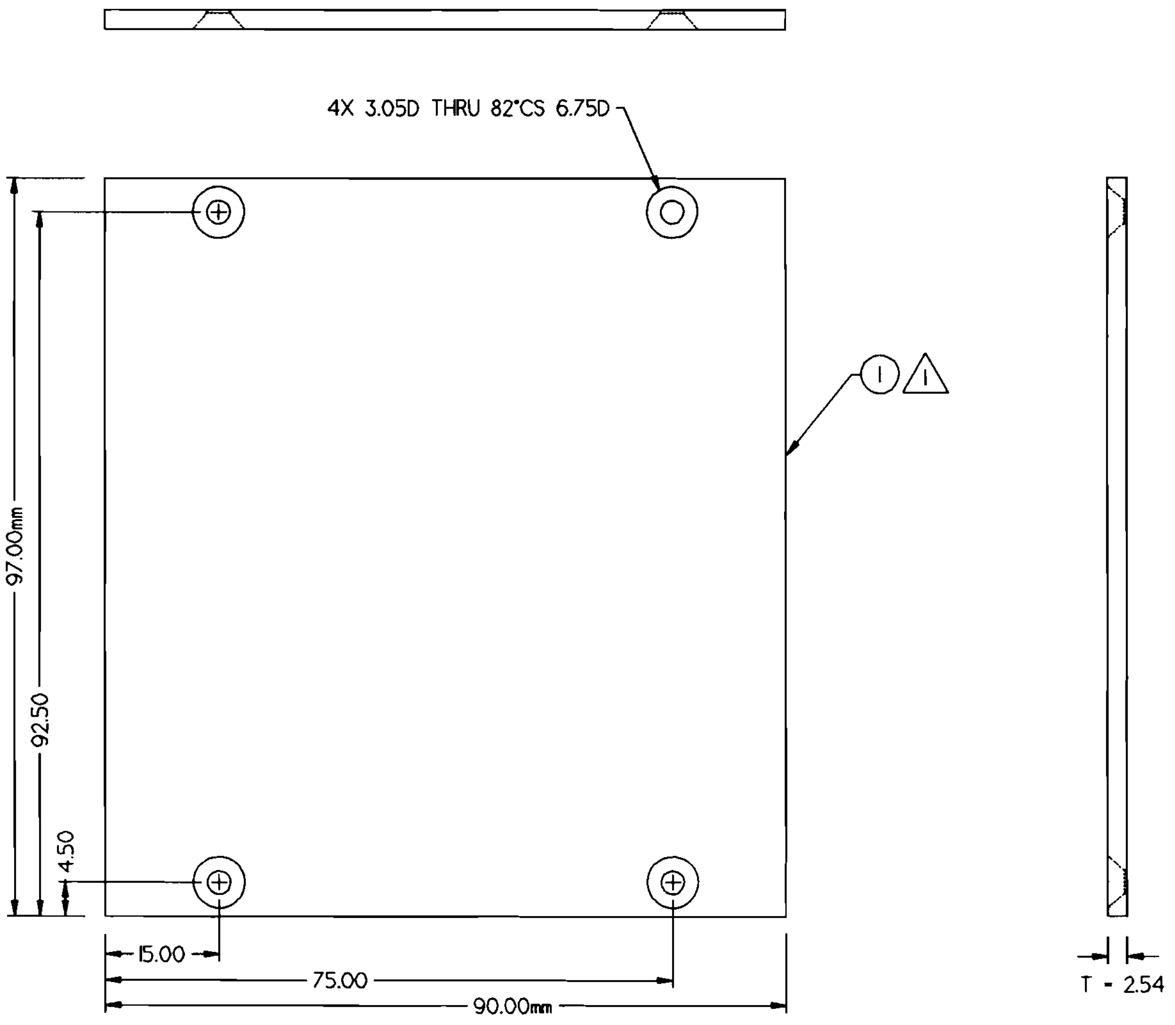

8		ENCLOSURE FASTENER (SHORT): 4-40UNC x 6.4mm FLATHEAD SOCKET SCREW		2
2		SIDE PLATE	ALUMINUM. 6061-T6 2.54mm THK	1
QTY	PART/ID NO.	NOMENCLATURE OR DESCRIPTION	MATERIAL SPECIFICATION	ITEM NO.
PARTS LIST				

DISTRIBUTION STATEMENT: CONFIDENTIAL AND PROPRIETARY INFORMATION. NOT FOR PUBLIC RELEASE. RESTRICTED DISTRIBUTION.

METRIC

THIRD ANGLE PROJECTION

TOL: X ±0.1 mm
X.X ±0.05mm
X.XX ±0.02mm

CONTRACT NO.
NA9-18558
PH-2 GLOVE CONTR.

BEGEJ CORPORATION

5 CLARET ASH ROAD
LITTLETON. CO 80127
TEL/FAX: (303) 932-2186

APPROVALS	DATE
FINAL:	

TITLE SIDE PANELS AND ATTACHMENT HW

SIZE:

DWG. NO. TDRV212

REV. 22 JUNE 93

SCALE:

LAYER: 112

SHEET: 1 OF 1

NOTES:

1. IMPART NON-DIRECTION FINISH WITH "SCOTCHBRITE" PAD. THEN BLUE ANODIZE.

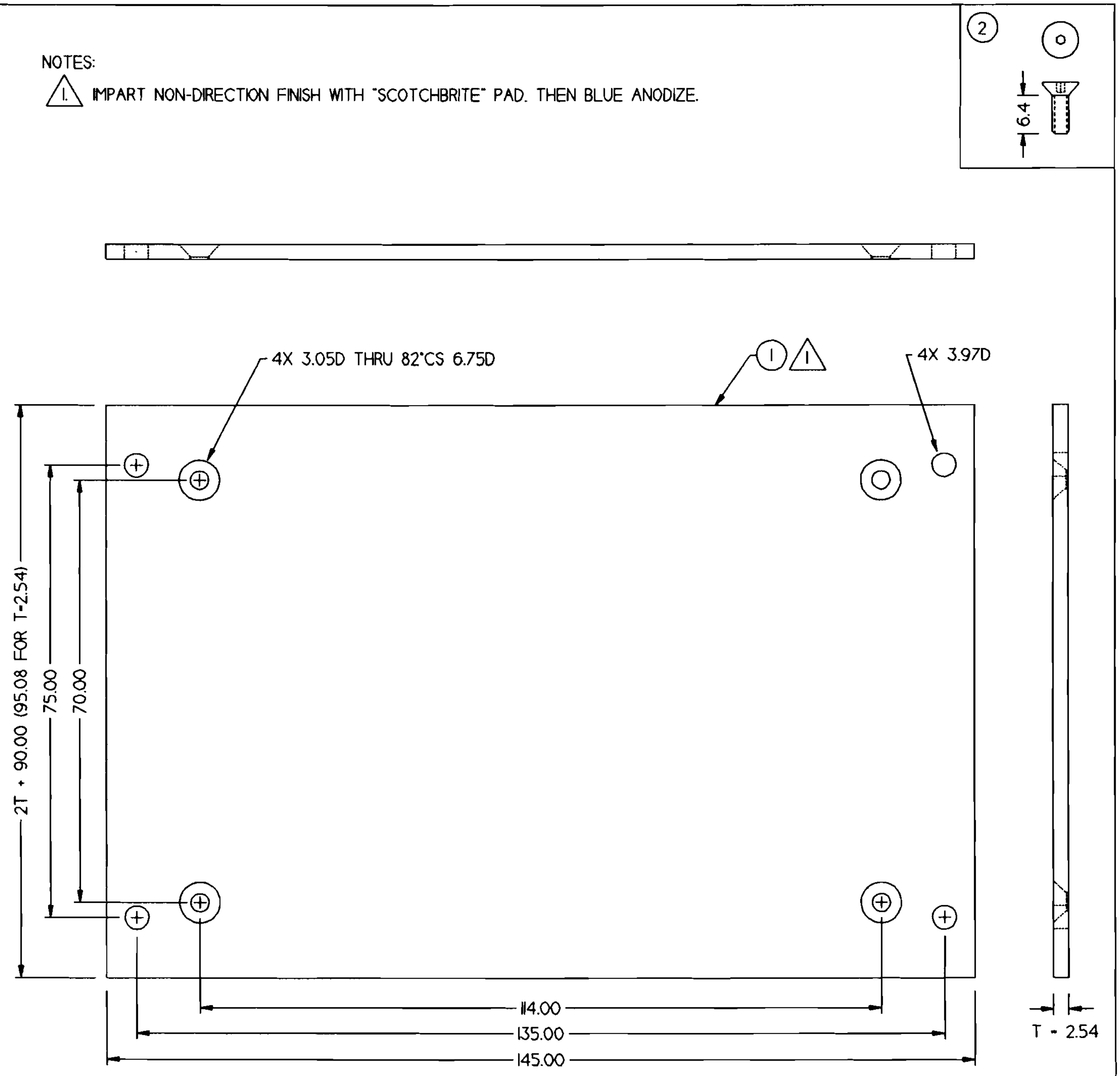

QTY	PART/ID NO.	NOMENCLATURE OR DESCRIPTION	MATERIAL SPECIFICATION	ITEM NO.
8		ENCLOSURE FASTENER (SHORT): 4-40UNC x 6.4mm SOCKET FLATHEAD SCREW		2
2		TOP/BOTTOM PANEL	ALUMINUM. 6061-T6 2.54mm THK	1

PARTS LIST

DISTRIBUTION STATEMENT: CONFIDENTIAL AND PROPRIETARY INFORMATION. NOT FOR PUBLIC RELEASE. RESTRICTED DISTRIBUTION.

METRIC
THIRD ANGLE PROJECTION

TOL: X ±0.1 mm
X.X ±0.05mm
X.XX ±0.02mm

CONTRACT NO.
NA9-18558
PH-2 GLOVE CONTR.

BEGEJ CORPORATION

5 CLARET ASH ROAD
LITTLETON. CO 80127
TEL/FAX: (303) 932-2186

APPROVALS	DATE
FINAL:	

TITLE TOP/BOTTOM PANELS AND ATTACHMENT HW

SIZE:
SCALE:
DWG. NO. TDRV2113
LAYER: 113
REV. 22 JUNE 93
SHEET: 1 OF 1

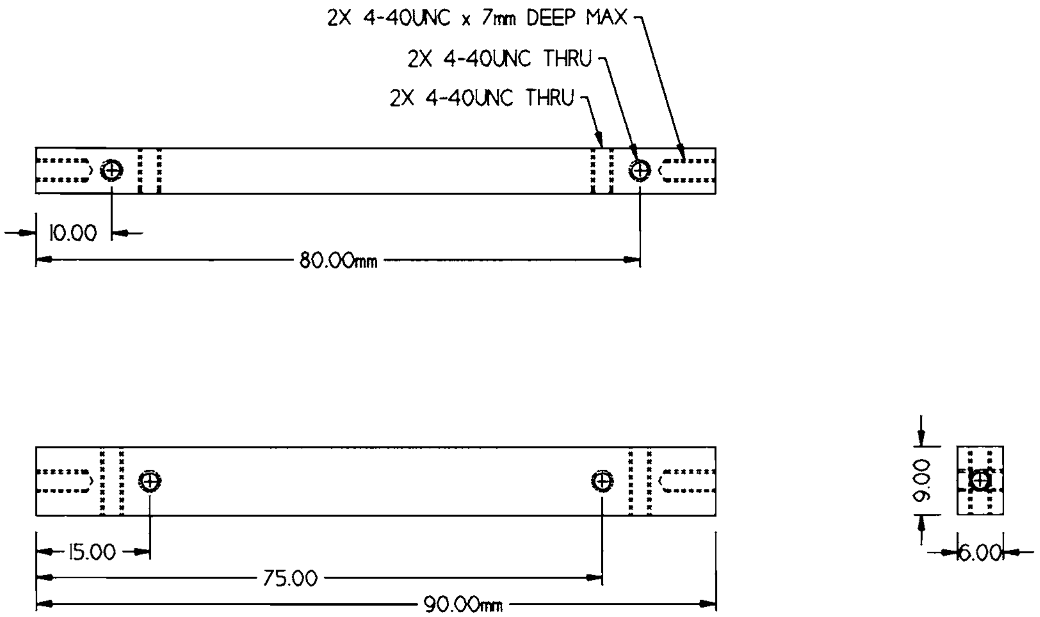

4		ENCLOSURE PANEL ATTACHMENT RAILS	ALUMINUM 6061-T6	
QTY	PART/ID NO.	NOMENCLATURE OR DESCRIPTION	MATERIAL SPECIFICATION	ITEM NO.
PARTS LIST				

DISTRIBUTION STATEMENT: CONFIDENTIAL AND PROPRIETARY INFORMATION. NOT FOR PUBLIC RELEASE. RESTRICTED DISTRIBUTION.

METRIC THIRD ANGLE PROJECTION	CONTRACT NO. NA9-18558 PH-2 GLOVE CONTR.		BEGEJ CORPORATION		5 CLARET ASH ROAD LITTLETON, CO 80127 TEL/FAX: (303) 932-2186
	APPROVALS	DATE	TITLE ENCLOSURE PANEL ATTACHMENT RAILS		
TOL: X ±0.1 mm X.X ±0.05mm X.XX ±0.02mm			SIZE:	DWG. NO. TDRV2114	REV. 25 APR 93
	FINAL:		SCALE:	LAYER: 14	SHEET: 1 OF 1

NOTES:
1. X
2. X
3. X
4. X

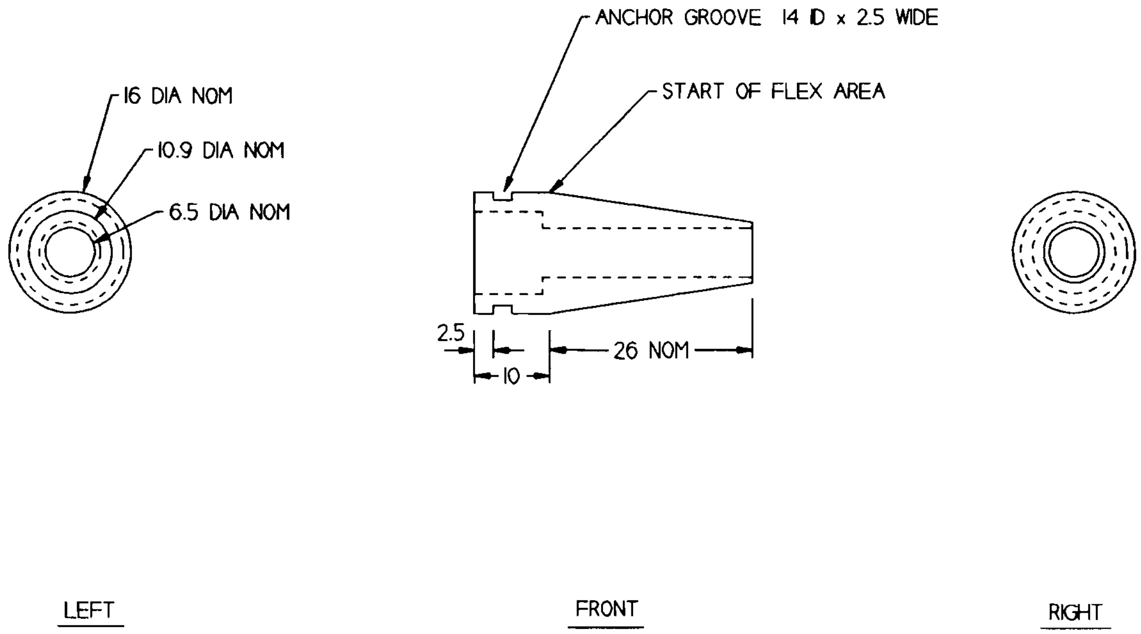

QTY	PART/ID NO.	NOMENCLATURE OR DESCRIPTION	MATERIAL SPECIFICATION	ITEM NO.
	AMP 212800-3	STRAIN RELIEF. 8.9mm MAX CHORD DIA	(NEWARK 89F267. v112. p630)	ALT
1	AMP 212800-1	STRAIN RELIEF. 6.5mm MAX CHORD DIA	(NEWARK 89F266. v112. p630)	1

PARTS LIST

DISTRIBUTION STATEMENT: CONFIDENTIAL AND PROPRIETARY INFORMATION. NOT FOR PUBLIC RELEASE. RESTRICTED DISTRIBUTION.

METRIC
THIRD ANGLE PROJECTION

TOLERANCES: X ±0.1mm
X.X ±0.05mm
X.XX ±0.02mm

CONTRACT NO.
NA9-18558
PH-2 GLOVE CONTR.

BEGEJ CORPORATION

5 CLARET ASH ROAD
LITTLETON. CO 80127
TEL/FAX: (303) 932-2186

APPROVALS	DATE
FINAL:	

TITLE
STRAIN RELIEF FOR TAXEL CABLE

SIZE:
DWG. NO. TDRV2116
REV. 21 APR 93
SCALE:
LAYER: 16
SHEET: 1 OF 1

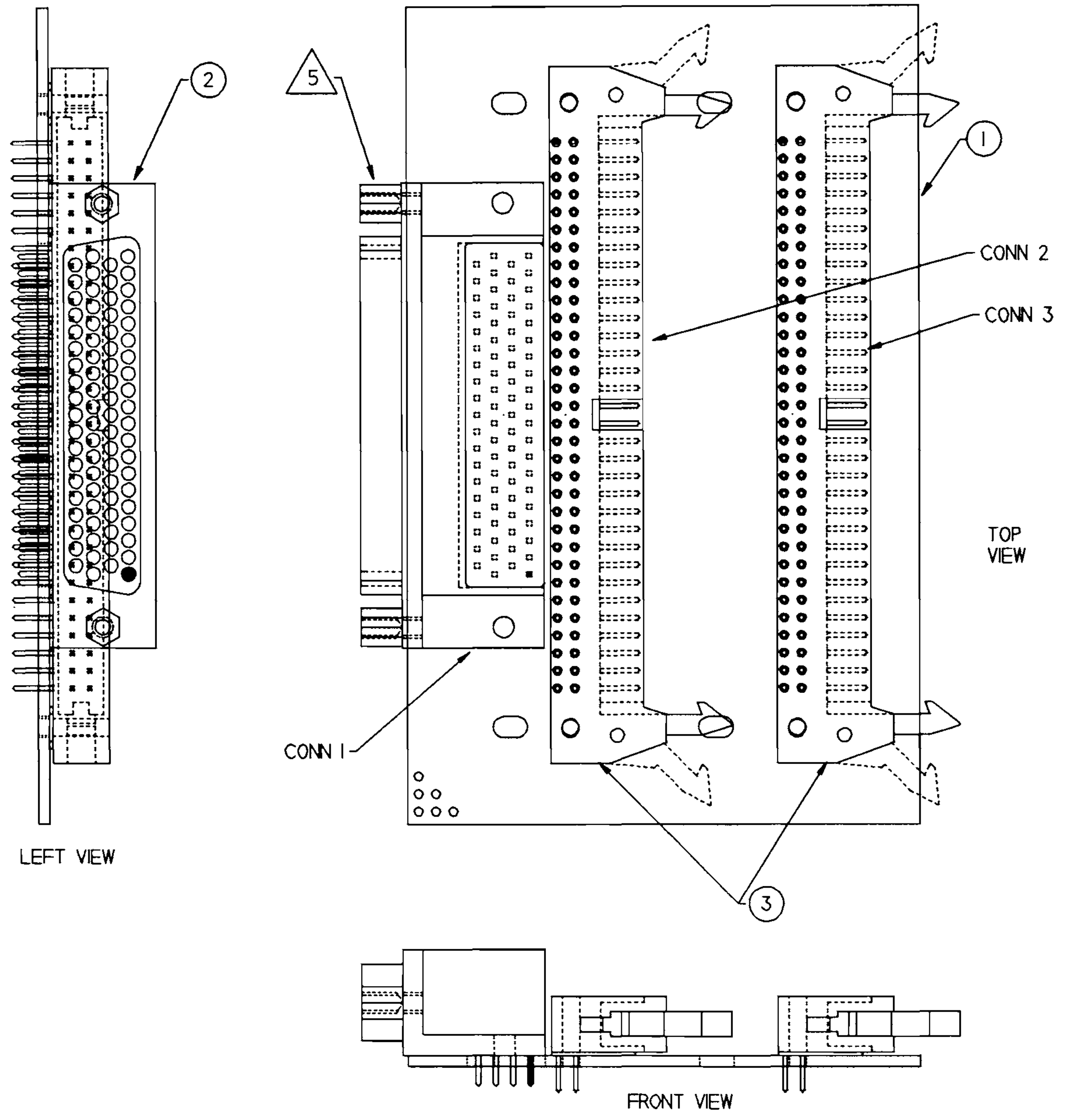

2		CONNECTOR. IDC. MALE. RT ANGLE WIREWRAP. 64 PINS.	DWG: TDRV2102.GCD	3
1	VOLTREX HD-DL78S-RAPC	CONNECTOR. D-SUB RECEPTACLE. RT ANGLE. 78 PINS.	DWG: TDRV2103.GCD	2
1		CONNECTOR ADAPTER SUBSTRATE	DWG: TDRV2104.GCD	1
QTY	PART/ID NO.	NOMENCLATURE OR DESCRIPTION	MATERIAL SPECIFICATION	ITEM NO.
PARTS LIST				

DISTRIBUTION STATEMENT: CONFIDENTIAL AND PROPRIETARY INFORMATION. NOT FOR PUBLIC RELEASE. RESTRICTED DISTRIBUTION.

METRIC
THIRD ANGLE PROJECTION

CONTRACT NO.
NA9-18558
PH-2 GLOVE CONTR.

BEGEJ CORPORATION

5 CLARET ASH ROAD
LITTLETON. CO 80127
TEL/FAX: (303) 932-2186

TOL: X ±0.1 mm
X.X ±0.05mm
X.XX ±0.02mm

APPROVALS | DATE
FINAL:

TITLE
CONNECTOR ADAPTER FOR DISPLAY DRIVER (48-64TX)

SIZE:
SCALE:
DWG. NO. TDRV2001.GCD
LAYER: MULTI
REV. 28 JUNE 93
SHEET: 1 OF 3

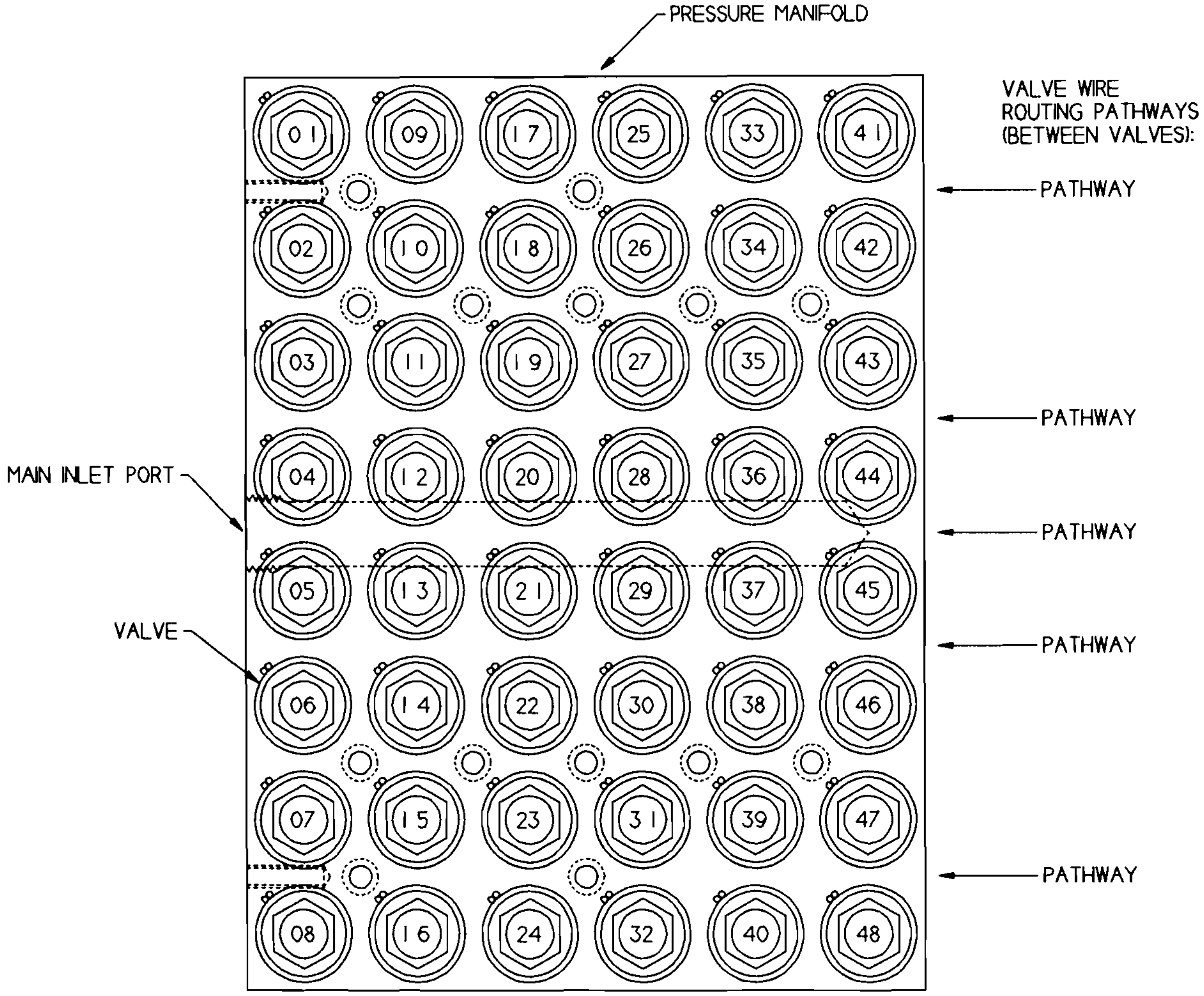

TOP VIEW

DISTRIBUTION STATEMENT: CONFIDENTIAL AND PROPRIETARY INFORMATION. NOT FOR PUBLIC RELEASE. RESTRICTED DISTRIBUTION.

METRIC
THIRD ANGLE PROJECTION
TOL: X ±0.1 mm
X.X ±0.05mm
X.XX ±0.02mm

CONTRACT NO.
NA9-18558
PH-2 GLOVE CONTR.

BEGEJ CORPORATION

5 CLARET ASH ROAD
LITTLETON, CO 80127
TEL/FAX: (303) 932-2186

APPROVALS	DATE
FINAL:	

TITLE
CONNECTOR ADAPTER - VALVE NUMBER DESIGNATION

SIZE:
DWG. NO. TDRV2001
REV. 28 JUNE 93
SCALE:
LAYER: MULTI
SHEET: 3 OF 3

NOTES:

1. CLEARANCE UNDER BOARD LIMITED TO 5mm MAX (NOT INCLUDING INSULATION).
2. WIREWRAP CONNECTIONS WITH 28-30AWG WIREWRAP WIRE, THEN SOLDER EACH POST.
3. MASS TERMINATE VALVE LEADS INTO IDC RECEPTACLE CONNECTORS IN THE FOLLOWING SEQUENCE:

   VALVE 1: CONN 2, PINS 1 AND 2
   VALVE 2: CONN 2, PINS 3 AND 4
   ETC
   VALVE 32: CONN 2, PINS 63 AND 64
   VALVE 33: CONN 3, PINS 1 AND 2
   VALVE 34: CONN 3, PINS 3 AND 4
   ETC
   VALVE 64: CONN 3, PINS 63 AND 64

4. USE 18AWG SOLID WIRE AS "RETURN" LINE.
5. DO NOT USE WASHERS ON THE FRONT OF THE FEMALE SCREWLOCKS, AS THE PANEL THICKNESS IS 1.50mm. ALSO, ANCHOR THE SCREWLOCKS WITH A NUT AND LOCKWASHER ON THE BACK SIDE OF THE CONNECTOR (USE BACK LOCKNUT REGARDLESS OF WHETHER CONNECTOR BODY IS THREADED OR NOT).

CONNECTOR WIRING:

(ORANGE WIRE TO ODD
BROWN WIRE TO EVEN)

FROM CONN 1	TO CONN 2	FROM CONN 1	TO CONN 3
1	1	33	1
2	3	34	3
3	5	35	5
4	7	36	7
5	9	37	9
6	11	38	11
7	13	39	13
8	15	40	15
9	17	41	17
10	19	42	19
11	21	43	21
12	23	44	23
13	25	45	25
14	27	46	27
15	29	47	29
16	31	48	31
17	33	49	33
18	35	50	35
19	37	51	37
20	39	52	39
21	41	53	41
22	43	54	43
23	45	55	45
24	47	56	47
25	49	57	49
26	51	58	51
27	53	59	53
28	55	60	55
29	57	61	57
30	59	62	59
31	61	63	61
32	63	64	63
(VALVE)	(ORANGE WIRE)	(VALVE)	(ORANGE WIRE)

"RETURN"
- PINS 65 - 78 ON CONN 1
- ALL EVEN PINS ON CONN 2
- ALL EVEN PINS ON CONN 3

DISTRIBUTION STATEMENT: CONFIDENTIAL AND PROPRIETARY INFORMATION. NOT FOR PUBLIC RELEASE. RESTRICTED DISTRIBUTION.

METRIC THIRD ANGLE PROJECTION	CONTRACT NO. NA9-18558 PH-2 GLOVE CONTR.		BEGEJ CORPORATION		5 CLARET ASH ROAD LITTLETON, CO 80127 TEL/FAX: (303) 932-2186	
	APPROVALS	DATE	TITLE CONNECTOR ADAPTER - WIRING LIST			
TOL: X ±0.1 mm X.X ±0.05mm X.XX ±0.02mm			SIZE:		DWG. NO. TDRV2001	REV. 28 JUNE 93
	FINAL:		SCALE:		LAYER: MULTI	SHEET: 2 OF 3

NOTES:
1. ALL HOLES IN PRE-PUNCHED BOARD SHOWN.

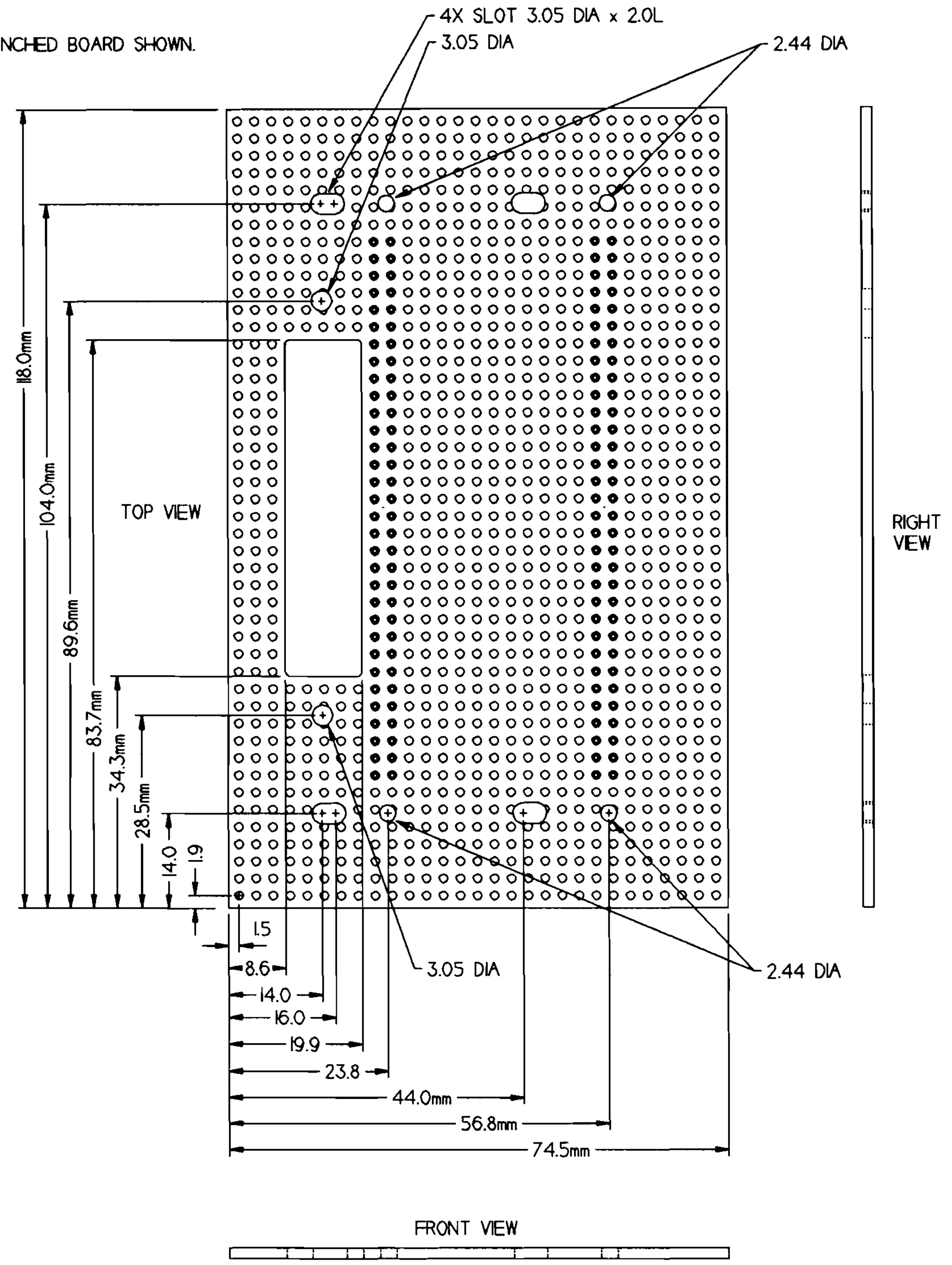

QTY	PART/ID NO.	NOMENCLATURE OR DESCRIPTION	MATERIAL SPECIFICATION	ITEM NO.
1		CONNECTOR ADAPTER SUBSTRATE	1.60TK. 1.07 D HOLES X 2.54GRD	

PARTS LIST

DISTRIBUTION STATEMENT: CONFIDENTIAL AND PROPRIETARY INFORMATION. NOT FOR PUBLIC RELEASE. RESTRICTED DISTRIBUTION.

METRIC
THIRD ANGLE PROJECTION

TOL: X ±0.1 mm
X.X ±0.05mm
X.XX ±0.02mm

CONTRACT NO.
NA9-18558
PH-2 GLOVE CONTR.

APPROVALS | DATE
FINAL:

BEGEJ CORPORATION
5 CLARET ASH ROAD
LITTLETON. CO 80127
TEL/FAX: (303) 932-2186

TITLE
CONNECTOR ADAPTER SUBSTRATE

SIZE:
DWG. NO. TDRV2104.GCD
REV. 28 JUNE 93
SCALE:
LAYER: 104
SHEET: 1 OF 2

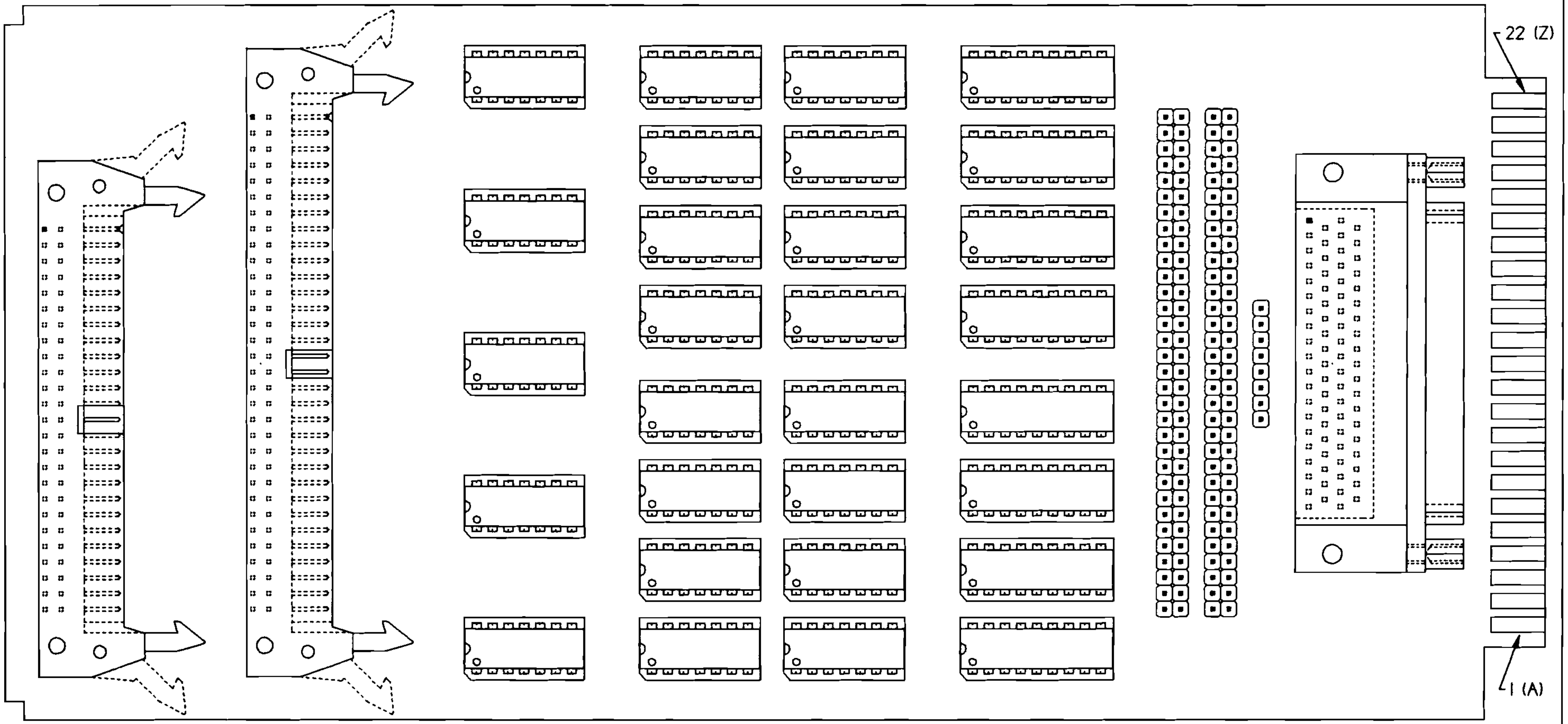

NOTES:
1. x
2. X
3. X
4. X

METRIC
THIRD ANGLE PROJECTION
TOL: X ±0.1 mm
X.X ±0.05mm
X.XX ±0.02mm

CONTRACT NO.
NA9-18558
PH-2 GLOVE CONTR.

APPROVALS | DATE
FINAL:

BEGEJ CORPORATION

5 CLARET ASH ROAD
LITTLETON, CO 80127
TEL/FAX: (303) 932-2186

TITLE
PWM CONTROLLER BOARD LAYOUT

SIZE:
DWG. NO. TDRV2003
REV. 8 OCT 93
SCALE:
LAYER:
SHEET: 1 OF 2

QTY	PART/ID NO.	NOMENCLATURE OR DESCRIPTION	MATERIAL SPECIFICATION	ITEM NO.
1	VECTOR 3662-2	CIRCUIT BOARD. PREPUNCHED HOLES 2.54mm CENTERS.	DWG TDRV2117	
2	DUPONT 71922-164	IDC CONNECTOR. MALE. 64 PIN. RIGHT ANGLE WR (OR PCB).		
4		CONNECTOR FASTENER ASSEMBLY: 2-56UNF x 12.7mm PANHEAD SCREW WITH LOCKWASHER AND NUT		
1	DUPONT 71922-140	IDC CONNECTOR. MALE. 64 PIN. RIGHT ANGLE WR (OR PCB).	DWG TDRV2119	
4		CONNECTOR FASTENER ASSEMBLY: 2-56UNF x 12.7mm PANHEAD SCREW WITH LOCKWASHER AND NUT		
1	SPC HD-DL78S-RAPC	D-SUB CONNECTOR. RECEPTACLE. 78 PIN. RIGHT ANGLE PC MOUNT	DWG TDRV2103	
2		CONNECTOR FASTENER ASSEMBLY: 4-40UNC x 8mm PANHEAD SCREWS WITH LOCKWASHER AND NUT		
20		DIP SOCKET. 14 PIN	DWG TDRV2120	
8		DIP SOCKET. 18 PIN	DWG TDRV2120	
2	BERGCON 68602-472	HEADER. DUAL. 2.54 CTR. 2X32 POSITIONS	DWG TDRV2121	
1	BERGCON 68002-436	HEADER. DUAL. 2.54 CTR. 1X8 POSITIONS	DWG TDRV2121	

PARTS LIST

METRIC THIRD ANGLE PROJECTION	CONTRACT NO. NA9-18558 PH-2 GLOVE CONTR.	BEGEJ CORPORATION	5 CLARET ASH ROAD LITTLETON. CO 80127 TEL/FAX: (303) 932-2186	
	APPROVALS	DATE	TITLE PWM CONTROLLER BOARD LAYOUT	
TOL: X ±0.1 mm X.X ±0.05mm X.XX ±0.02mm			SIZE:	DWG. NO. TDRV2003	REV. 8 OCT 93
	FINAL:		SCALE:	LAYER:	SHEET: 2 OF 2

APPENDIX G

DRIVER MODULE MODIFICATIONS, ELECTRICAL SCHEMATICS and PCB LAYOUTS of the PWM VALVE CONTROLLER CIRCUIT BOARD

The following 16 pages contain: (1) the detailed mechanical drawings indicating the modified components that must be made to install the PCB-version of the PWM valve controller in the driver modules, and; (2) the electrical schematics and PCB layout drawings describing the PWM valve controller circuit board illustrated in Figure 47. A photograph of the final driver configuration that would be achieved is shown in Figure 50.

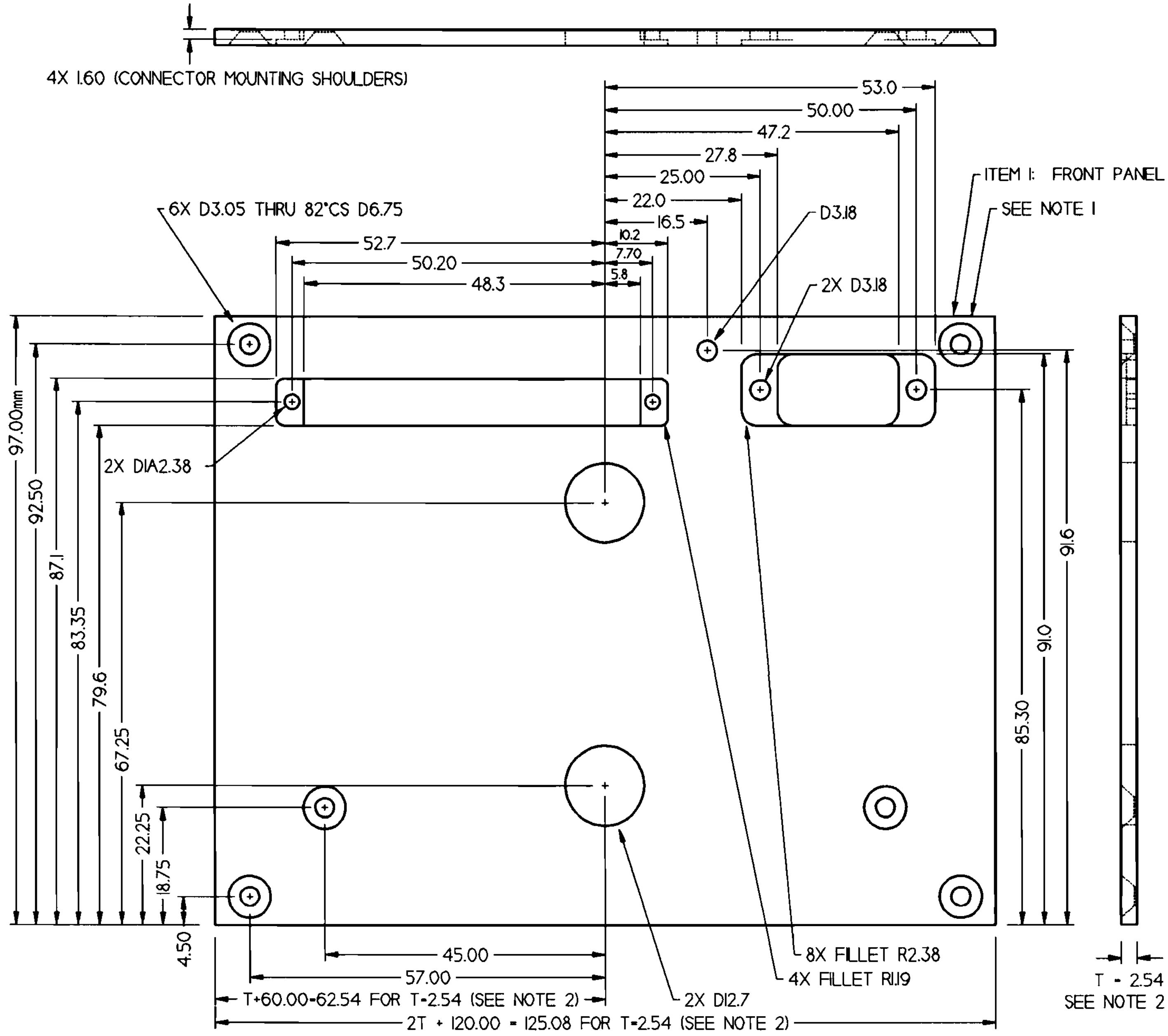

ITEM 2 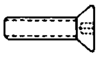

ITEM 3 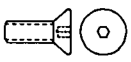

NOTES:

1. IMPART NON-DIRECTION FINISH WITH "SCOTCHBRITE" PAD. THEN BLUE ANODIZE.
2. ADJUST DIMENSIONS AS NECESSARY DEPENDING ON ACTUAL PLATE THICKNESS T.

4	TDRV3110-PRT03	ENCLOSURE FASTENER: 4-40UNC x 1/4" FLATHEAD SOCKET SCREW		3
2	TDRV3110-PRT02	ENCLOSURE FASTENER: 4-40UNC x 3/8" FLATHEAD SOCKET SCREW		2
1	TDRV3110-PRT01	FRONT PANEL	ALUMINUM. 6061-T6 2.54mm THK	1
QTY	PART/ID NO.	NOMENCLATURE OR DESCRIPTION	MATERIAL SPECIFICATION	ITEM NO.
PARTS LIST (ONE MODULE)				

DISTRIBUTION STATEMENT: CONFIDENTIAL AND PROPRIETARY INFORMATION. NOT FOR PUBLIC RELEASE. RESTRICTED DISTRIBUTION.

METRIC

THIRD ANGLE PROJECTION

TOL:
X ±0.1 mm
X.X ±0.05mm
X.XX ±0.02mm

CONTRACT NO.
NAS9-18901
PH-2 WAM TACT. DISP.

BEGEJ CORPORATION

5 CLARET ASH ROAD
LITTLETON. CO 80127
TEL/FAX: (303) 932-2186

APPROVALS	DATE
FINAL:	

TITLE
FRONT ENCLOSURE PANEL (INT. PCB PWM VERSION)

SIZE:		DWG. NO. TDRV3110	REV. 19 DEC 94
SCALE:		LAYER: 110	SHEET: 1 OF 1

PCB FASTENER

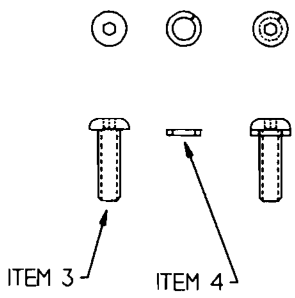

ITEM 2: MANIFOLD SCREW

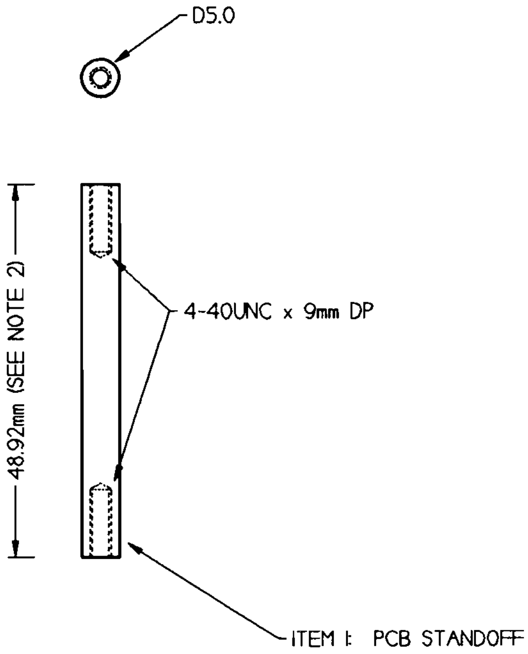

NOTES:

1. NO WASHERS ARE USED ON MANIFOLD SCREW.

2. STANDOFF HEIGHT SELECTED TO PLACE TOP OF PWM PCB AT 79.00mm FROM BOTTOM EDGE OF ENCLOSURE. A PCB THICKNESS OF 1.58mm WOULD RESULT IN A CLEARANCE OF 3.92mm BETWEEN THE BOARD AND VACUUM MANIFOLD.

2	TDRV3108-PRT04	PCB FASTENER: SPLIT LOCKWASHER 4-40UNC		4
2	TDRV3108-PRT03	PCB FASTENER: 4-40UNC x 3/8" BUTTONHEAD SOCKET SCREW		3
2	TDRV3108-PRT02	PRESSURE MANIFOLD FASTENER: 4-40UNC x 1/2" SOCKET CAP SCREW		2
2	TDRV3108-PRT01	PCB STANDOFF	STEEL	1
QTY	PART/ID NO.	NOMENCLATURE OR DESCRIPTION	MATERIAL SPECIFICATION	ITEM NO.
PARTS LIST (ONE MODULE)				

DISTRIBUTION STATEMENT: CONFIDENTIAL AND PROPRIETARY INFORMATION. NOT FOR PUBLIC RELEASE. RESTRICTED DISTRIBUTION.

METRIC

THIRD ANGLE PROJECTION

TOL: X ±0.1 mm
X.X ±0.05mm
X.XX ±0.02mm

CONTRACT NO.
NAS9-18901
PH-2 WAM TACT. DRV.

BEGEJ CORPORATION

5 CLARET ASH ROAD
LITTLETON, CO 80127
TEL/FAX: (303) 932-2186

APPROVALS	DATE	TITLE PCB STANDOFFS (INTERNAL DRIVER VERSION)		
		SIZE:	DWG. NO. TDRV3108	REV. 17 NOV 94
FINAL:		SCALE:	LAYER: 108	SHEET: 1 OF 1

TOP VIEW

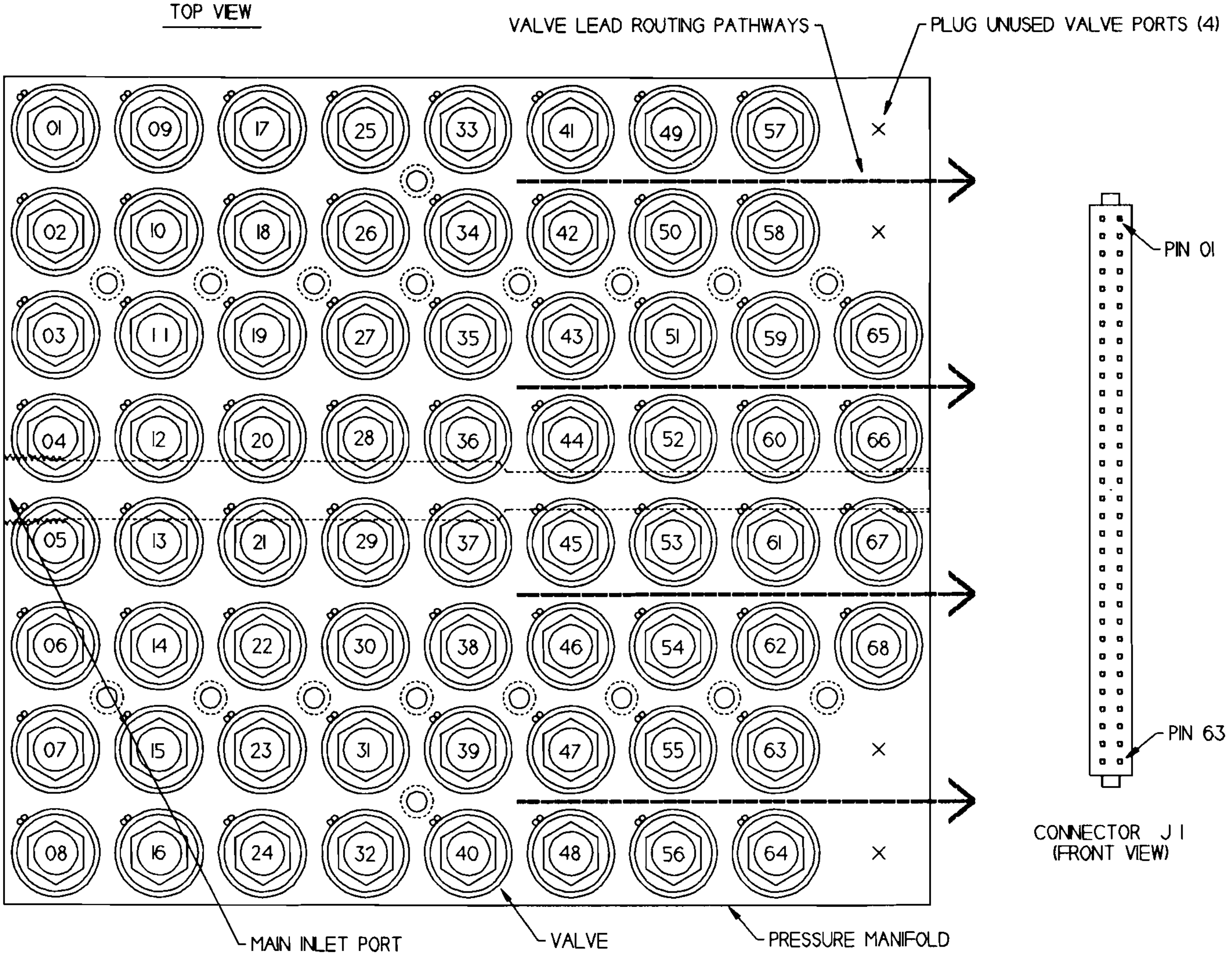

NOTES

1. SOLDER ONE LEAD (E.G. BROWN) OF EACH VALVE TO VALVE CASE.
2. MASS-TERMINATE REMAINING VALVE LEAD (E.G. ORANGE) INTO 2X32 IDC RECEPTACLE CONNECTOR (J I):
   VALVE 01 TO J I-01
   VALVE 02 TO J I-02
   ETC
   VALVE 64 TO J I-64
3. SPARE VALVES 65-68 ARE USED AS NEEDED BY DISASSEMBLING J I, REMOVING THE LEAD FROM THE DEFECTIVE VALVE, AND INSERTING THE LEAD FOR THE SUBSTITUTE VALVE IN ITS PLACE.
4. FOLD CABLE OVER VACUUM MANIFOLD AND MATE J I WITH HEADER P2 ON PWM PCB.

DISTRIBUTION STATEMENT: CONFIDENTIAL AND PROPRIETARY INFORMATION. NOT FOR PUBLIC RELEASE. RESTRICTED DISTRIBUTION.

METRIC

THIRD ANGLE PROJECTION

TOL: X ±0.1 mm
X.X ±0.05mm
X.XX ±0.02mm

CONTRACT NO.
NAS9-18901
PH-2 WAM TACT. DRV.

BEGEJ CORPORATION

5 CLARET ASH ROAD
LITTLETON, CO 80127
TEL/FAX: (303) 932-2186

APPROVALS
DATE
FINAL:

TITLE
VALVE LEAD TERMINATION (68 VALVES, 64 TAXELS)

SIZE:
SCALE:
DWG. NO. TDRV3001
LAYER: MULTI
REV. 17 JAN 95
SHEET: 1 OF 1

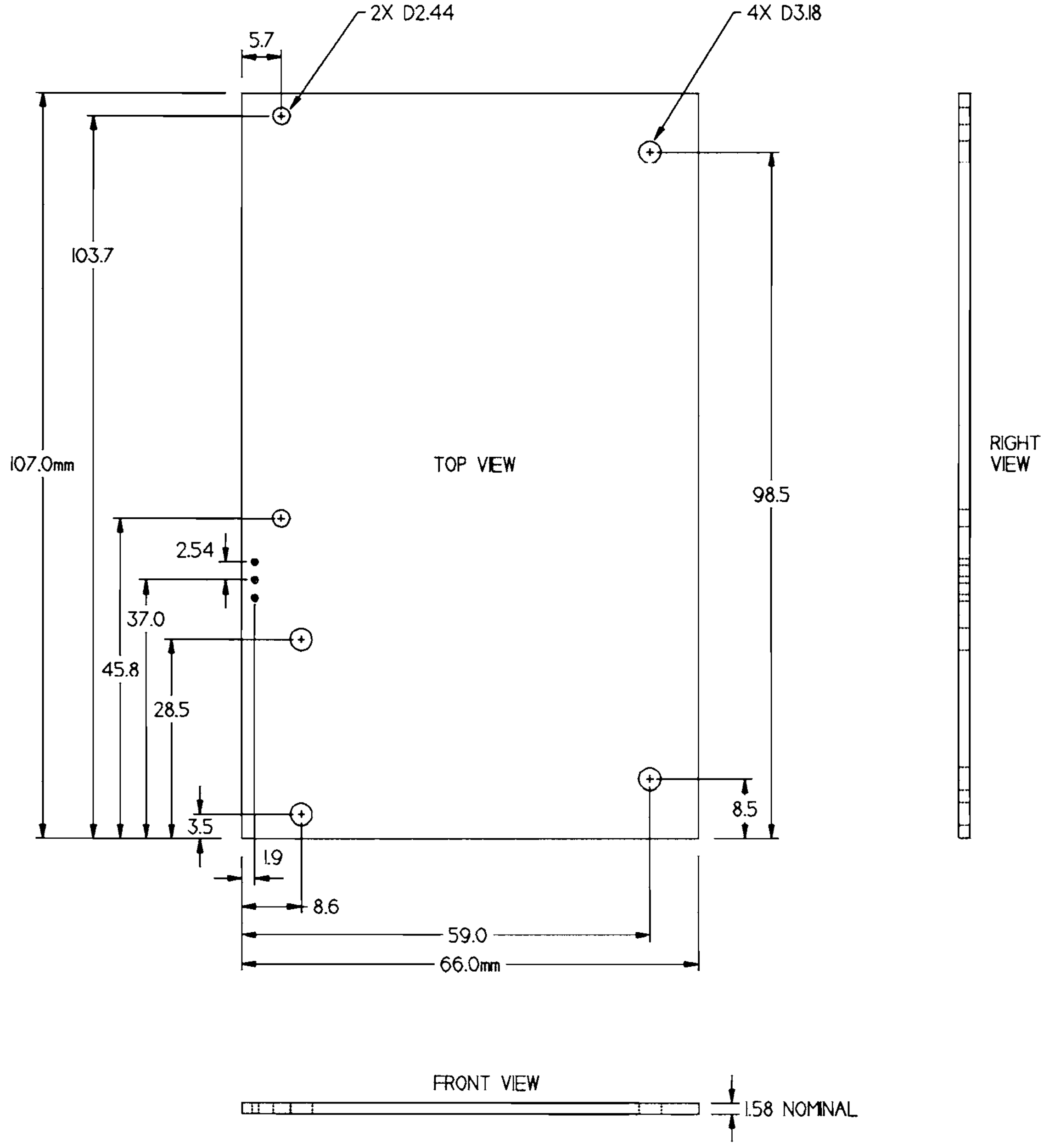

1	TDRV3140-PRT01	PWM CONTROLLER/DRIVER PCB. DESIGN No. VALCTRL4 VER-1	1.58mm thick	1
QTY	PART/ID NO.	NOMENCLATURE OR DESCRIPTION	MATERIAL SPECIFICATION	ITEM NO.
PARTS LIST (ONE MODULE)				

<u>DISTRIBUTION STATEMENT:</u> CONFIDENTIAL AND PROPRIETARY INFORMATION. NOT FOR PUBLIC RELEASE. RESTRICTED DISTRIBUTION.

METRIC THIRD ANGLE PROJECTION	CONTRACT NO. NAS9-18901 PH-2 WAM TACT. DRV.		BEGEJ CORPORATION		5 CLARET ASH ROAD LITTLETON, CO 80127 TEL/FAX: (303) 932-2186
	APPROVALS	DATE	TITLE PWM CONTROLLER DRIVER PCB		
TOL: X ±0.1 mm X.X ±0.05mm X.XX ±0.02mm			SIZE:	DWG. NO. TDRV3140	REV. 17 JAN 95
	FINAL:		SCALE:	LAYER: 140	SHEET: 1 OF 3

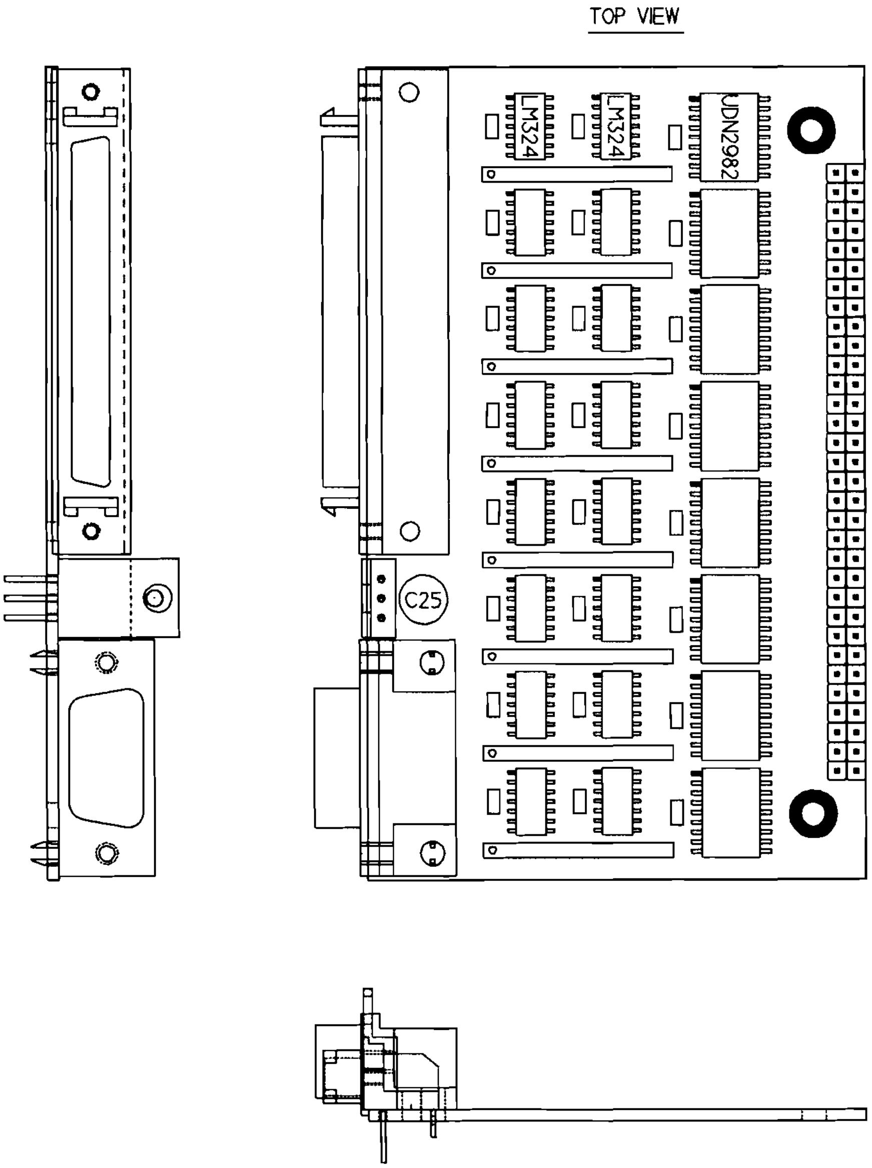

DISTRIBUTION STATEMENT: CONFIDENTIAL AND PROPRIETARY INFORMATION. NOT FOR PUBLIC RELEASE. RESTRICTED DISTRIBUTION.

METRIC THIRD ANGLE PROJECTION	CONTRACT NO. NAS9-18901 PH-2 WAM TACT. DRV.		BEGEJ CORPORATION			5 CLARET ASH ROAD LITTLETON, CO 80127 TEL/FAX: (303) 932-2186
	APPROVALS	DATE	TITLE PWM CONTROLLER/DRIVER PCB: SMT LAYOUT			
TOL: X ±0.1 mm X.X ±0.05mm X.XX ±0.02mm			SIZE:		DWG. NO. TDRV3140	REV. 17 JAN 95
	FINAL:		SCALE:		LAYER: 140	SHEET: 3 of 3

Begej Corporation
5 Claret Ash Rd.
Littleton, CO 80127

(303) 932-2186
Attn: Gordon White
PN VALCTRL4

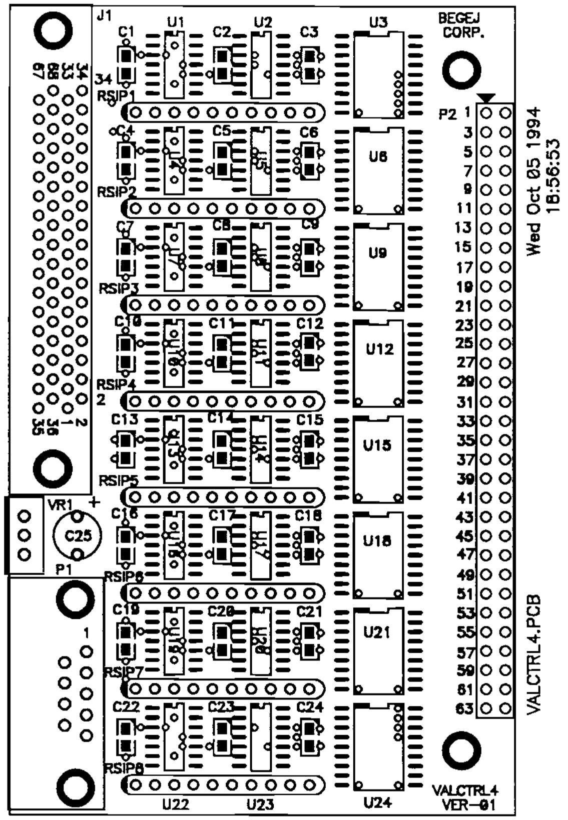

Silk Screen

Top Assembly Dwg.

Title	PWM CTRL and VALVE DRIVER	
Size A	Number VALCTRL4	Rev -01
Date Wed Oct 05 1994	Drawn by ABD	
Filename VALCTRL4.PCB	Sheet of	

FABRICATION NOTES:

1.) Mat'l FR4
2.) 2oz finished copper outer signal layers
    1oz finished copper all inner layers
3.) SMOBC Construction
4.) 60/40 Lead Tin over exposed Copper
5.) Soldermask = LPI
6.) Silkscreen = Yellow Epoxy Ink
7.) UL 94v-0
8.) Stackup is as follows
    - L1 = Component side
    - L2 = Mid 1
    - L3 = Gnd Plane
    - L4 = Pwr Plane
    - L5 = Mid 2
    - L6 = Solder Side
9.) Finished Thickness .062
10.) Cover all Vias

Begej Corporation
5 Claret Ash Rd.
Littleton, CO 80127

(303) 932-2186
Attn: Gordon White
PN VALCTRL4

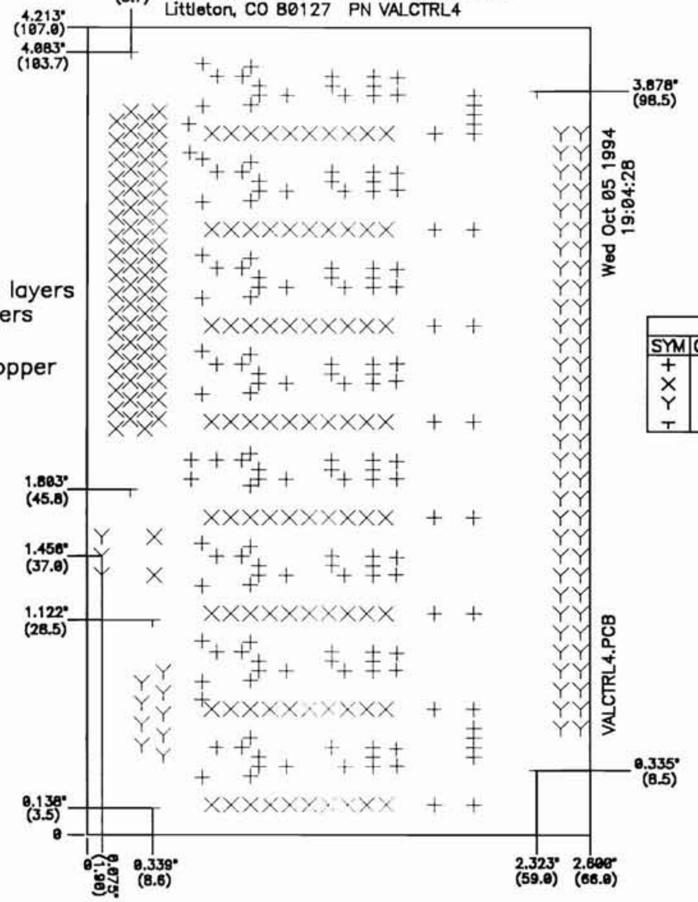

Drill/Fab Dwg

Drill Symbols			
SYM	COUNT	SIZE(in)	TOLERANCE
+	161	0.020	
×	150	0.035	+\- .003
Y	76	0.040	+\- .003
⊤	6	0.125	+\- .003

Title PWM CTRL and VALVE DRIVER
Size A
Number VALCTRL4
Rev -01
Date Wed Oct 05 1994
Drawn by ABD
Filename VALCTRL4.PCB
Sheet of

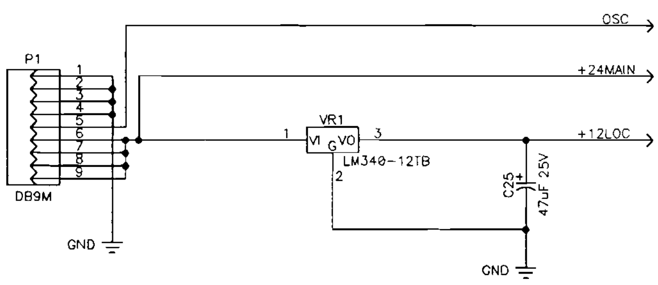

POWER/OSCILLATOR INTERFACE

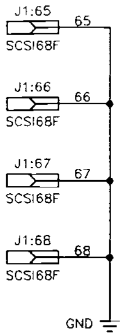

SYSTEM GROUND PINS

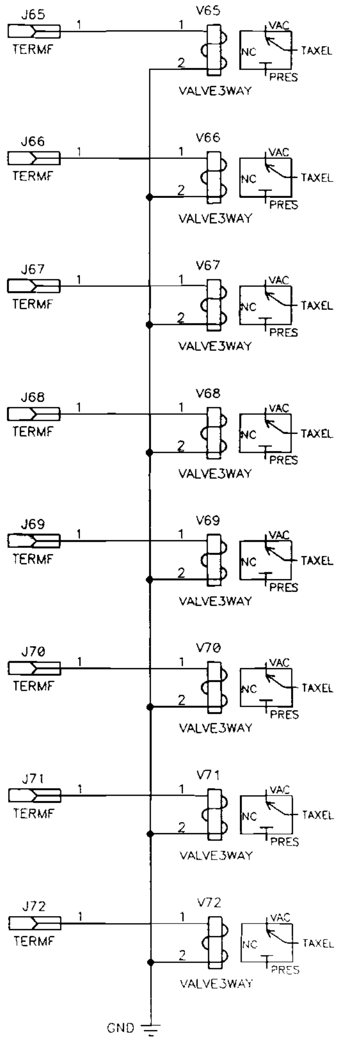

SPARE VALVES

PCB NOTES:

1. PRINCIPAL OBJECTIVE IS TO REDUCE BOARD LENGTH (MAX L = 78.0mm)

2. SURFACE MOUNT DEVICES:
   LM324D (SOIC)
   UDN2982LW (SOIC)
   C1 TO C24: BYPASS CAPS

   THE FOLLOWING COMPONENTS REQUIRE THRU-HOLE MOUNTING:
   J100: SCSI-68 CONNECTOR
   P100: DB9M CONNECTOR
   VR1: LM430 12v REGULATOR, T0-220 PACKAGE
   RSIP1 – RSIP8: SIP RESISTORS (NOTE: 6-PIN SIPS ALTS?)
   P1 – P64: 2X32 HEADER STRIP

3. ALL IC's MUST BE LOCATED ON FRONT OF THE BOARD FOR COOLING PURPOSES.

4. ALL OUTPUT DRIVER LINES (UDN2982) MUST BE ABLE TO CARRY A MAXIMUM CURRENT OF 120ma.

5. THE FOLLOWING NETS SHOULD BE PLACED ON INDIVIDUAL PCB LAYERS:
   +24MAIN

   GROUND

Title: PWM CTRL and VALVE DRIVER: Interface (PCB ver)	Dwg: VALCTRL4.S01	Sheet 1 of 9	Date: 15 SEPT 94	By: GKW

BEGEJ CORPORATION	Classification: CONFIDENTIAL AND PROPRIETARY INFORMATION.	Distrib: INTERNAL ONLY. NOT FOR PUBLIC RELEASE.

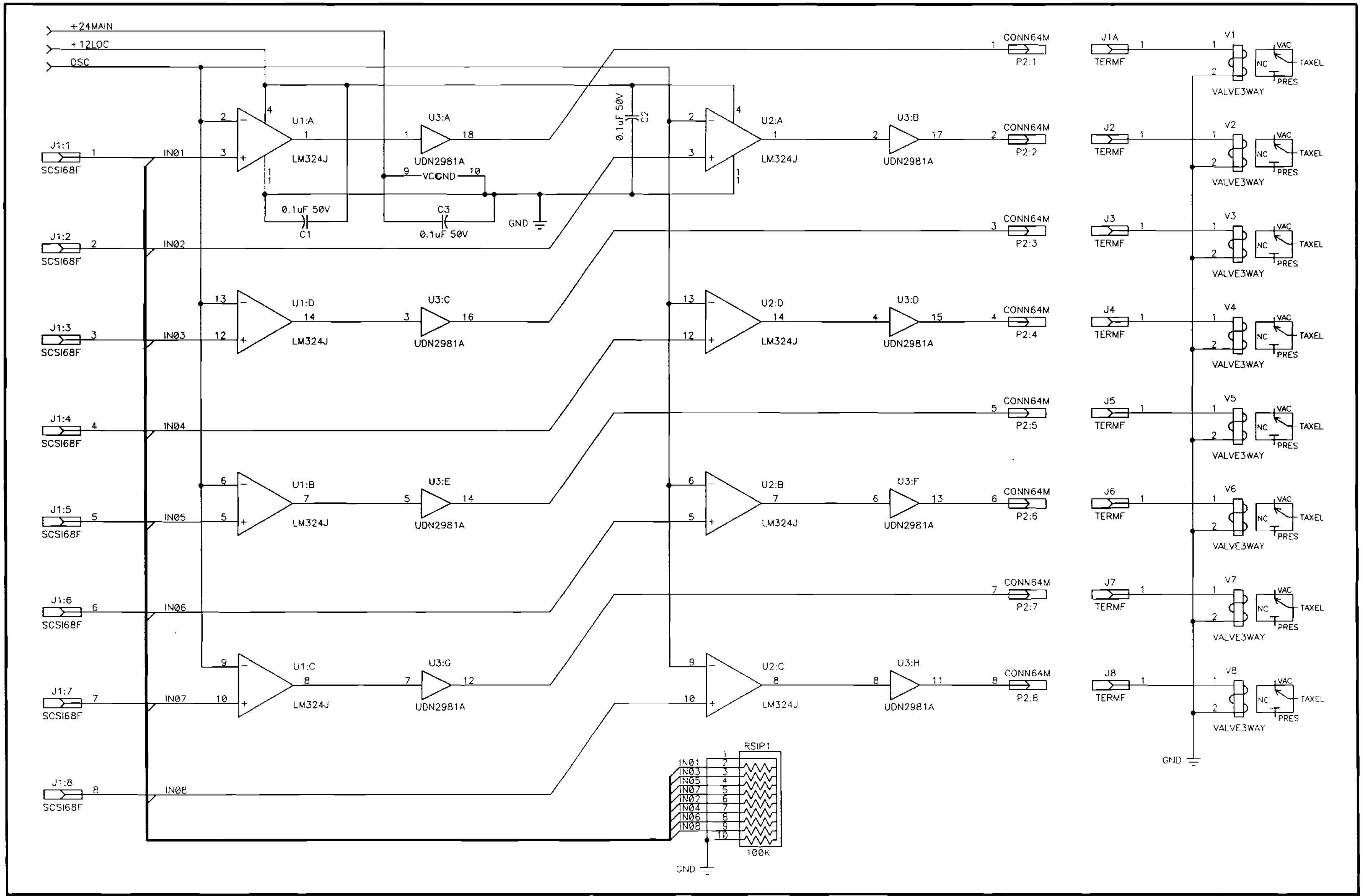

Title: PWM CTRL and VALVE DRIVER: CH 1-8 (PCB ver)
Dwg: VALCTRL4.S02
Sheet 2 of 9
Date: 15 SEPT 94
By: GKW
BEGEJ CORPORATION
Classification: CONFIDENTIAL AND PROPRIETARY INFORMATION.
Distrib: INTERNAL ONLY. NOT FOR PUBLIC RELEASE.

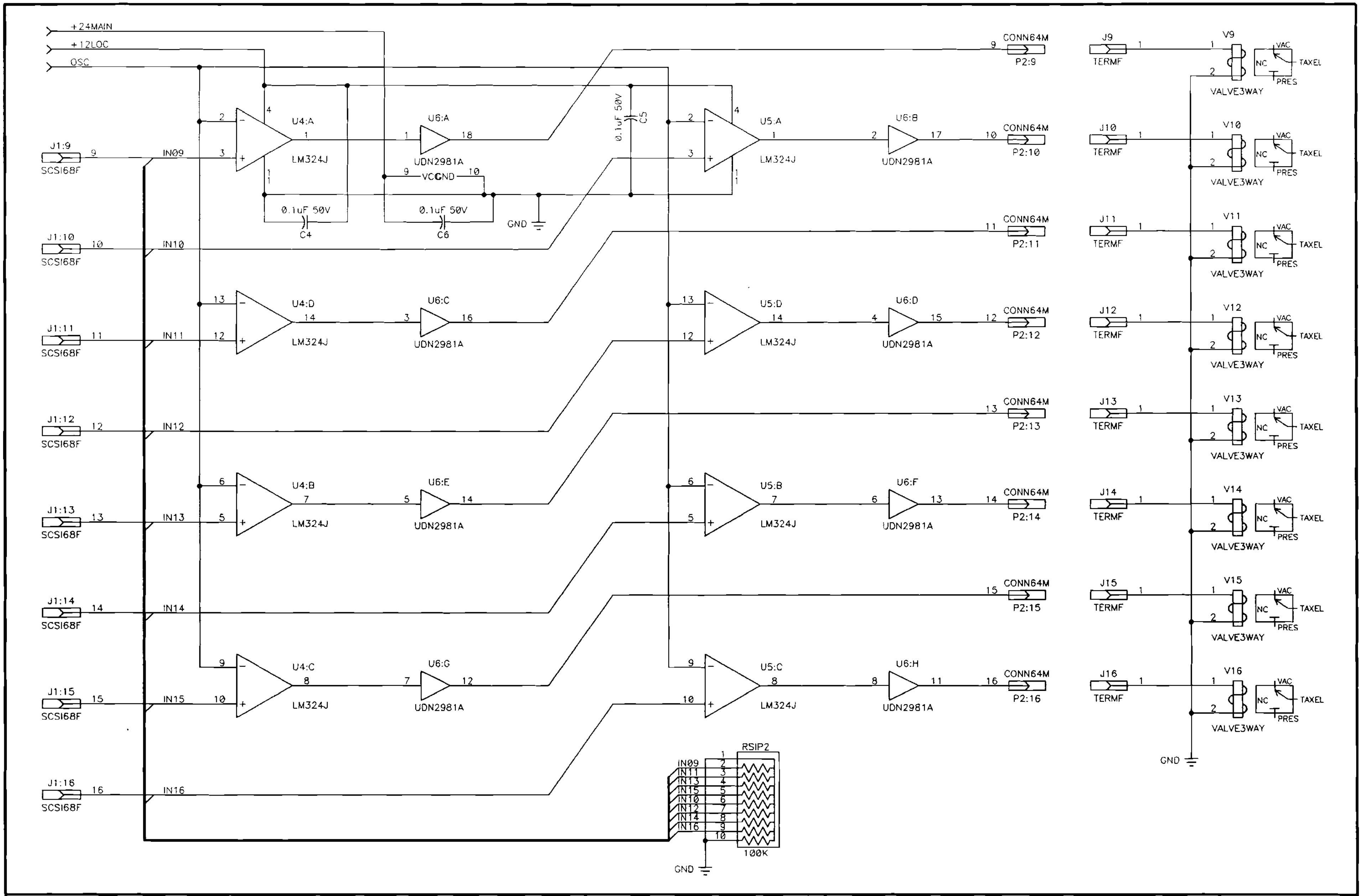

Title: PWM CTRL and VALVE DRIVER: CH 9–16 (PCB ver)
Dwg: VALCTRL4.S03
Sheet 3 of 9
Date: 15 SEPT 94
By: GKW

BEGEJ CORPORATION
Classification: CONFIDENTIAL AND PROPRIETARY INFORMATION.
Distrib: INTERNAL ONLY. NOT FOR PUBLIC RELEASE.

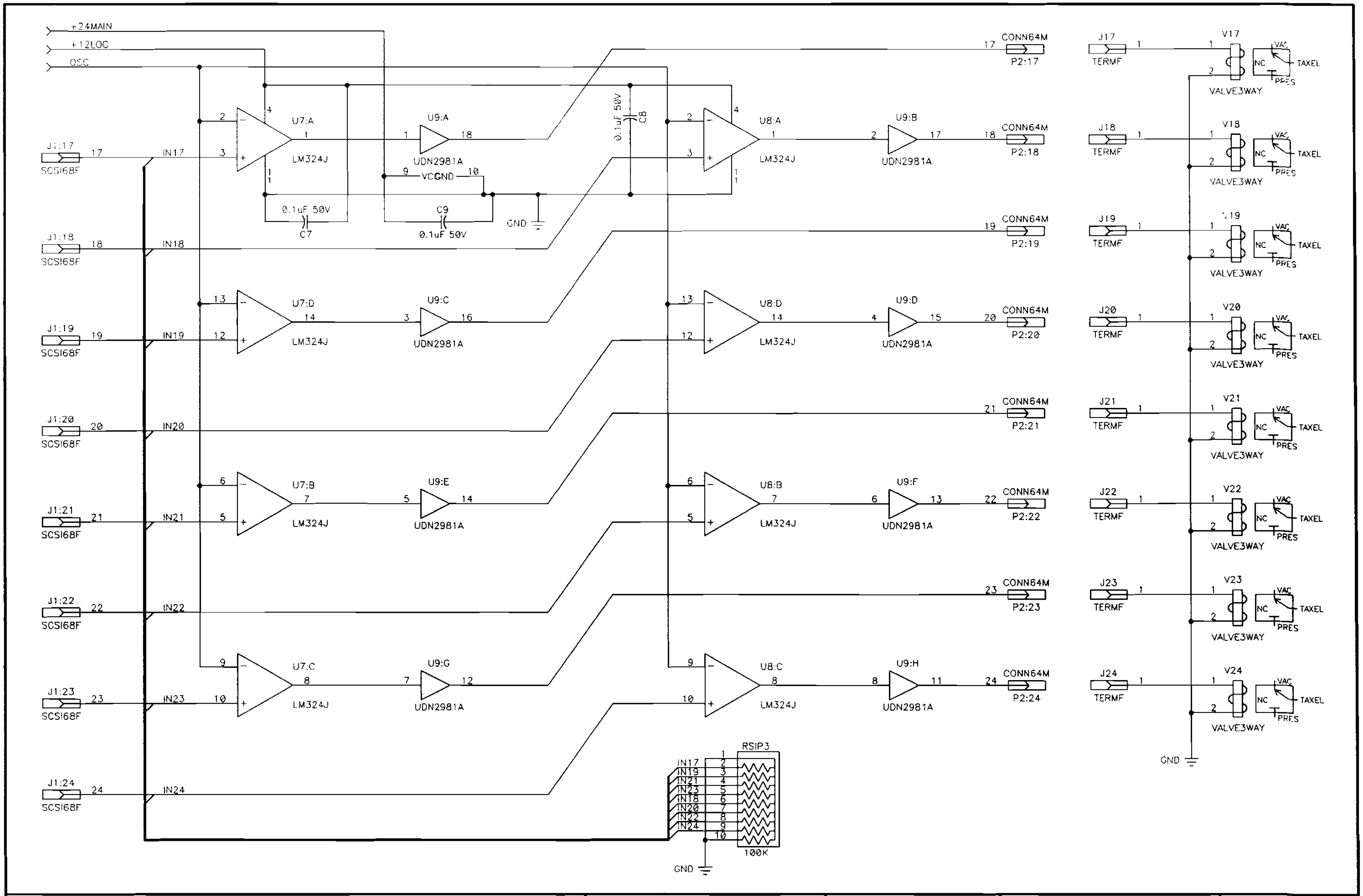

Title: PWM CTRL and VALVE DRIVER: CH 17–24 (PCB ver) | Dwg: VALCTRL4.S04 | Sheet 4 of 9 | Date: 15 SEPT 94 | By: GKW

BEGEJ CORPORATION | Classification: CONFIDENTIAL AND PROPRIETARY INFORMATION. | Distrib: INTERNAL ONLY. NOT FOR PUBLIC RELEASE.

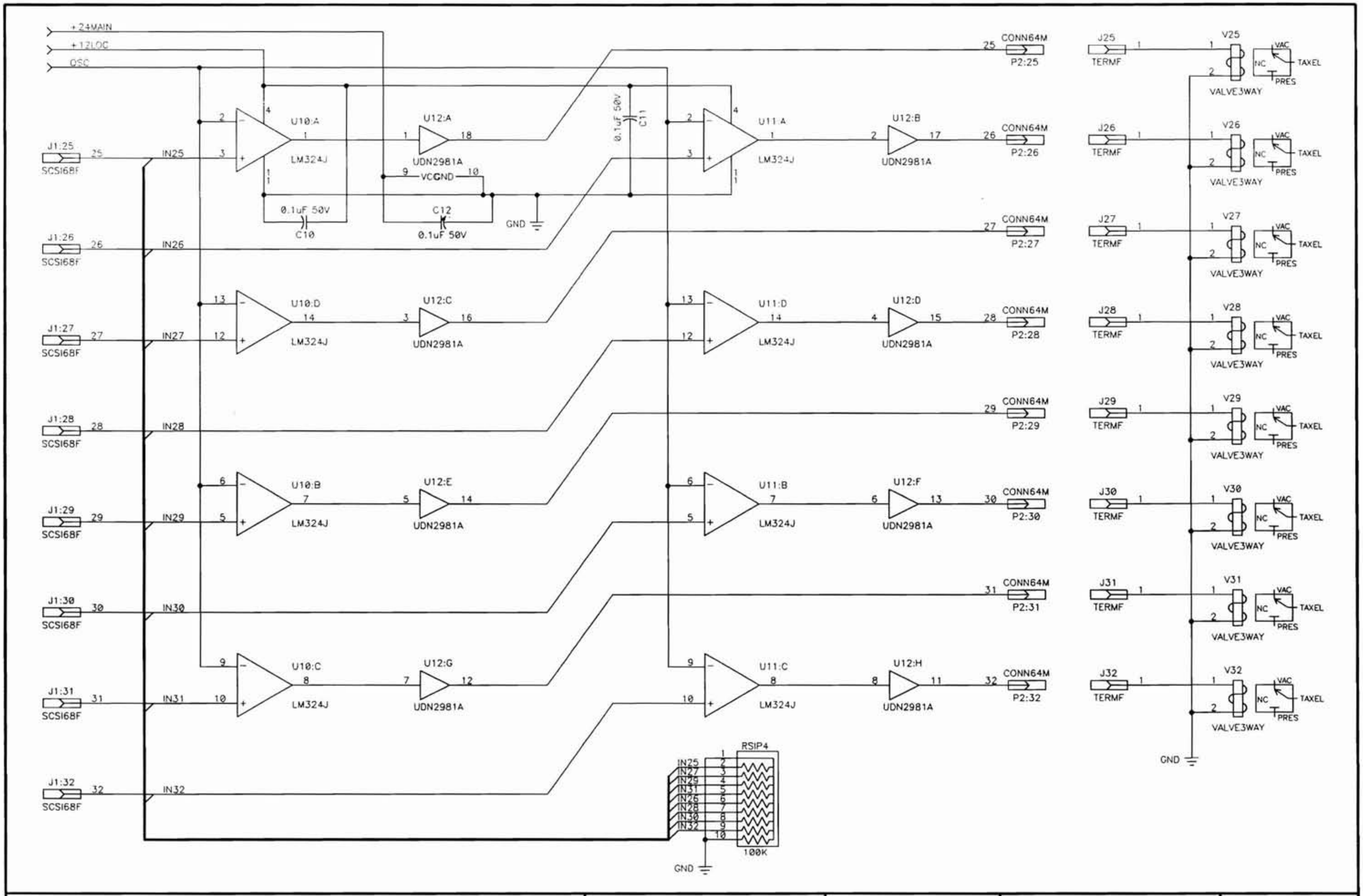

Title: PWM CTRL and VALVE DRIVER: CH 25–32 (PCB ver)
Dwg: VALCTRL4.S05
Sheet 5 of 9
Date: 15 SEPT 94
By: GKW

BEGEJ CORPORATION
Classification: CONFIDENTIAL AND PROPRIETARY INFORMATION.
Distrib: INTERNAL ONLY. NOT FOR PUBLIC RELEASE.

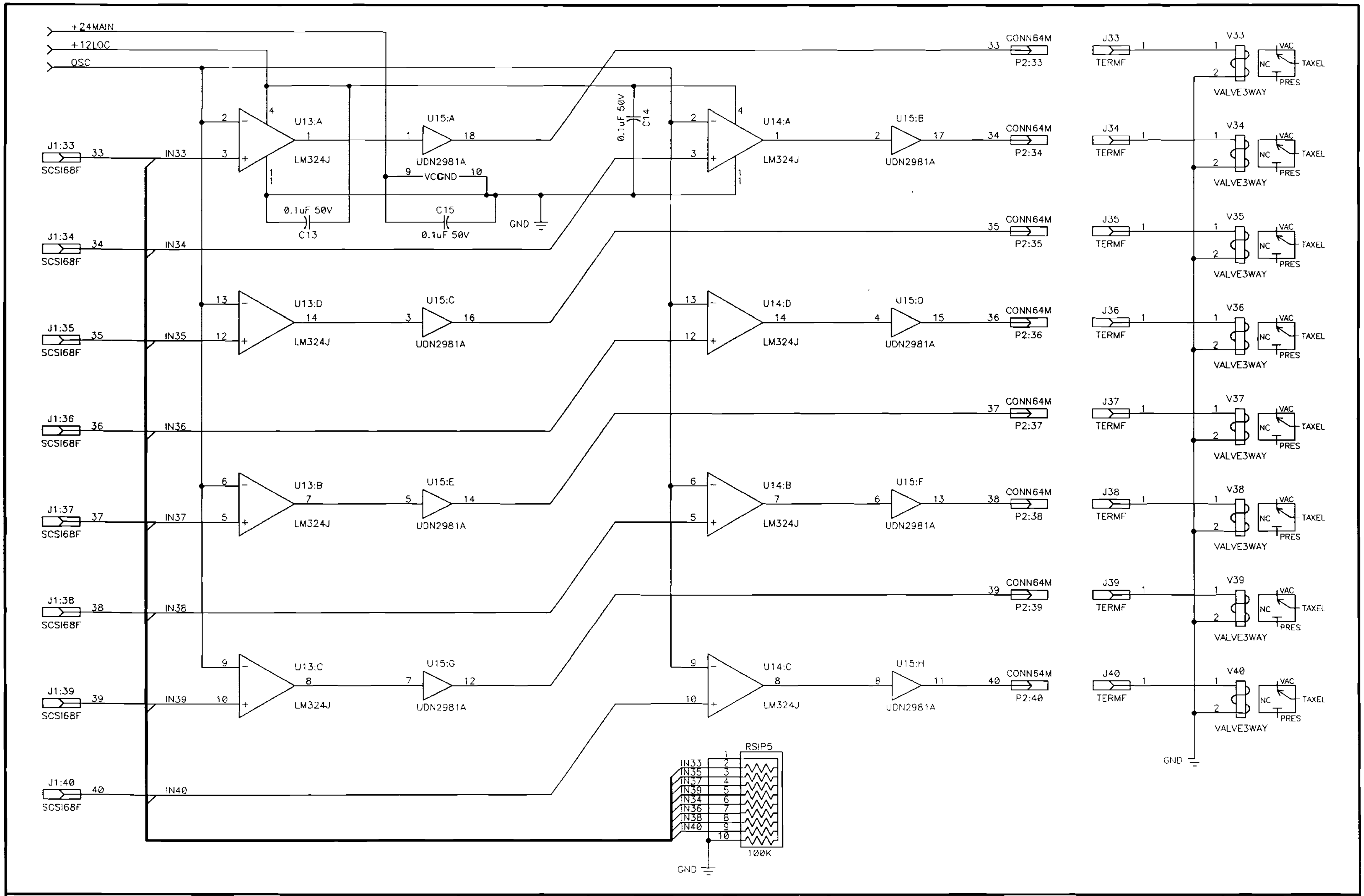

Title: PWM CTRL and VALVE DRIVER: CH 33-40 (PCB ver)

Dwg: VALCTRL4.S06

Sheet 6 of 9

Date: 15 SEPT 94

By: GKW

BEGEJ CORPORATION

Classification: CONFIDENTIAL AND PROPRIETARY INFORMATION.

Distrib: INTERNAL ONLY. NOT FOR PUBLIC RELEASE.

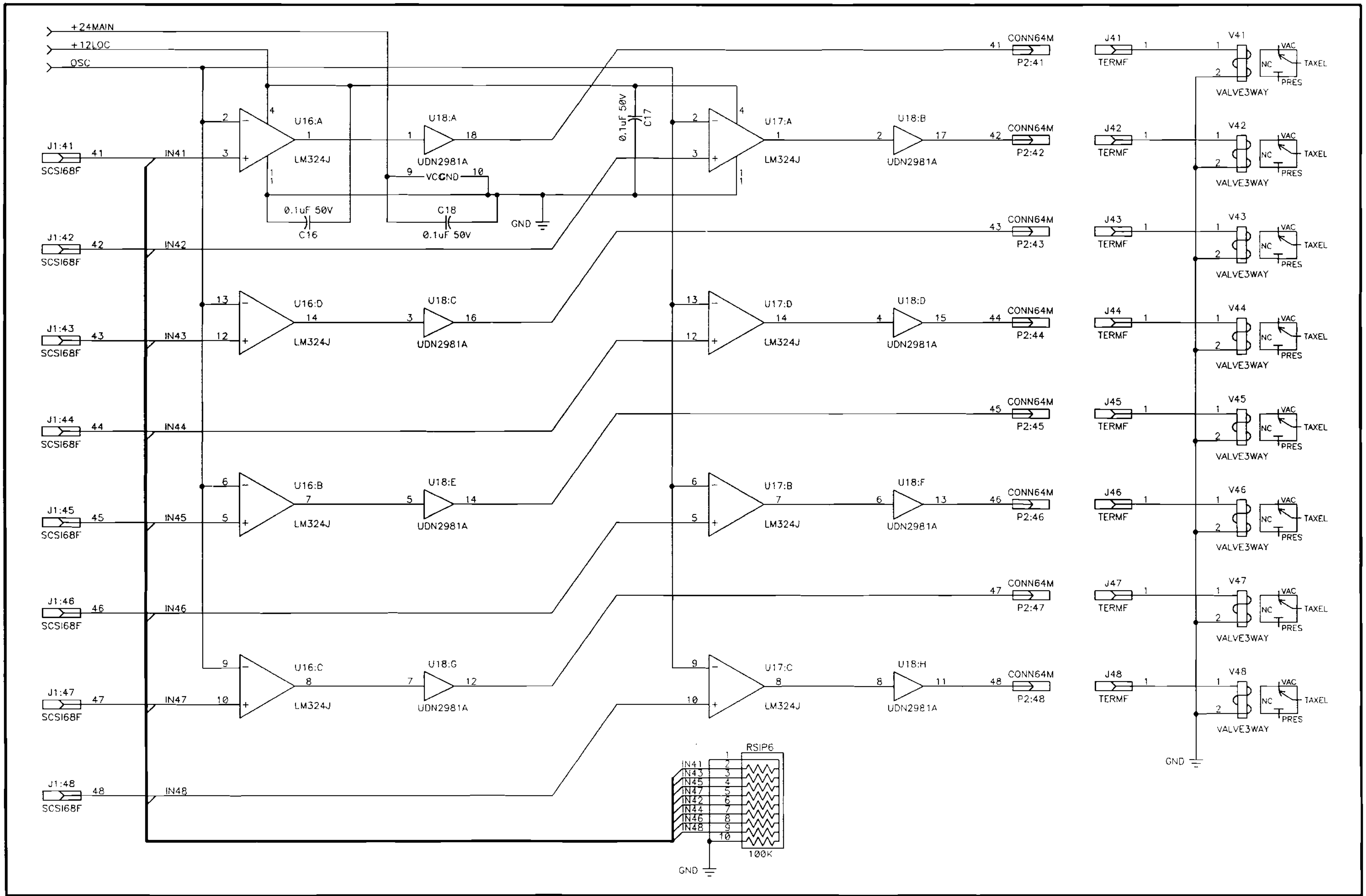

Title: PWM CTRL and VALVE DRIVER: CH 41 -48 (PCB ver) | Dwg: VALCTR_4.S07 | Sheet 7 of 9 | Date: 15 SEPT 94 | By: GKW

BEGEJ CORPORATION | Classification: CONFIDENTIAL AND PROPRIETARY INFORMATION. | Distrib: INTERNAL ONLY. NOT FOR PUBLIC RELEASE.

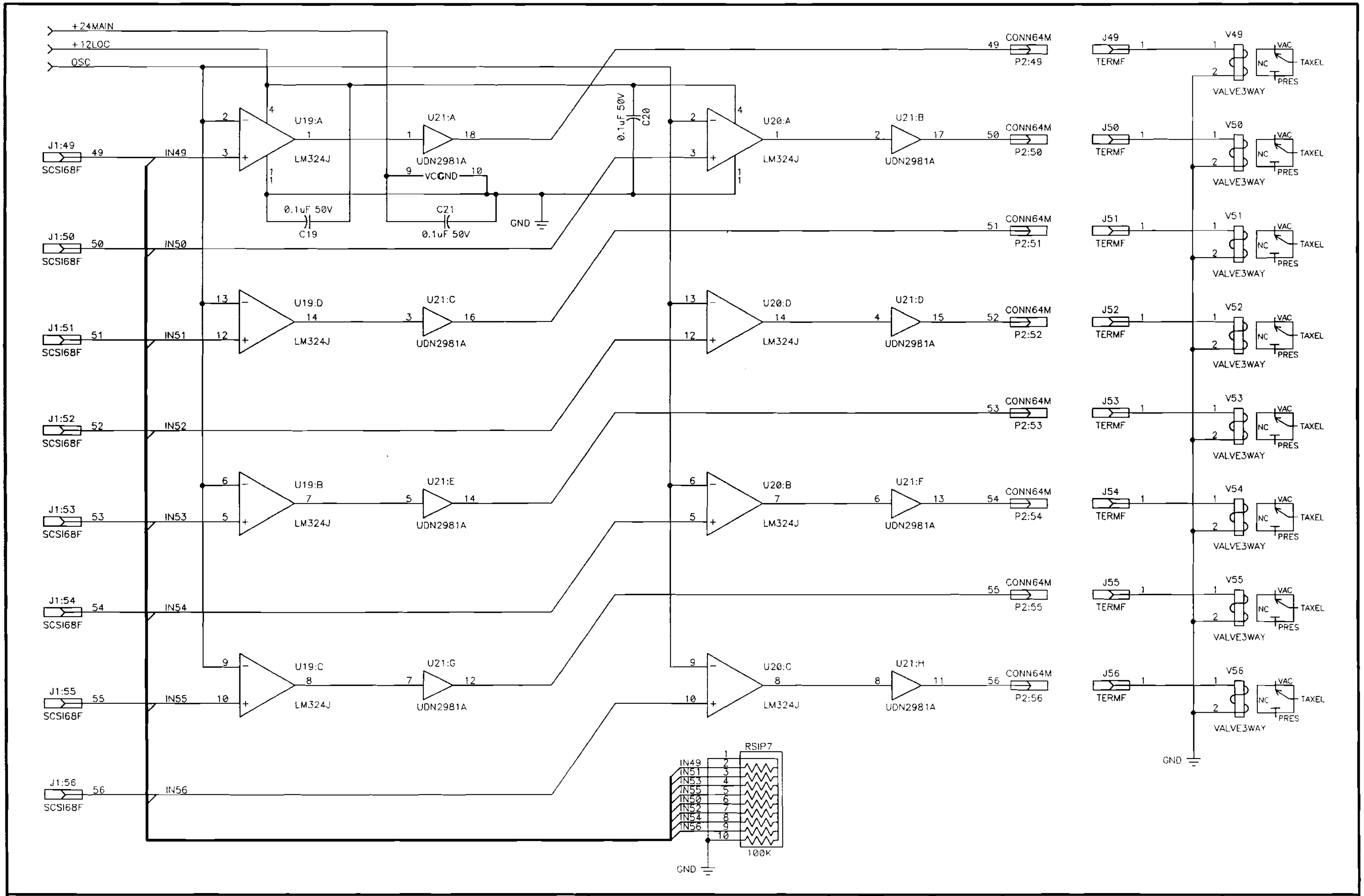

Title: PWM CTRL and VALVE DRIVER: CH 49-56 (PCB ver) | Dwg: VALCTRL4.S08 | Sheet 8 of 9 | Date: 15 SEPT 94 | By: GKW

BEGEJ CORPORATION | Classification: CONFIDENTIAL AND PROPRIETARY INFORMATION. | Distrib: INTERNAL ONLY. NOT FOR PUBLIC RELEASE.

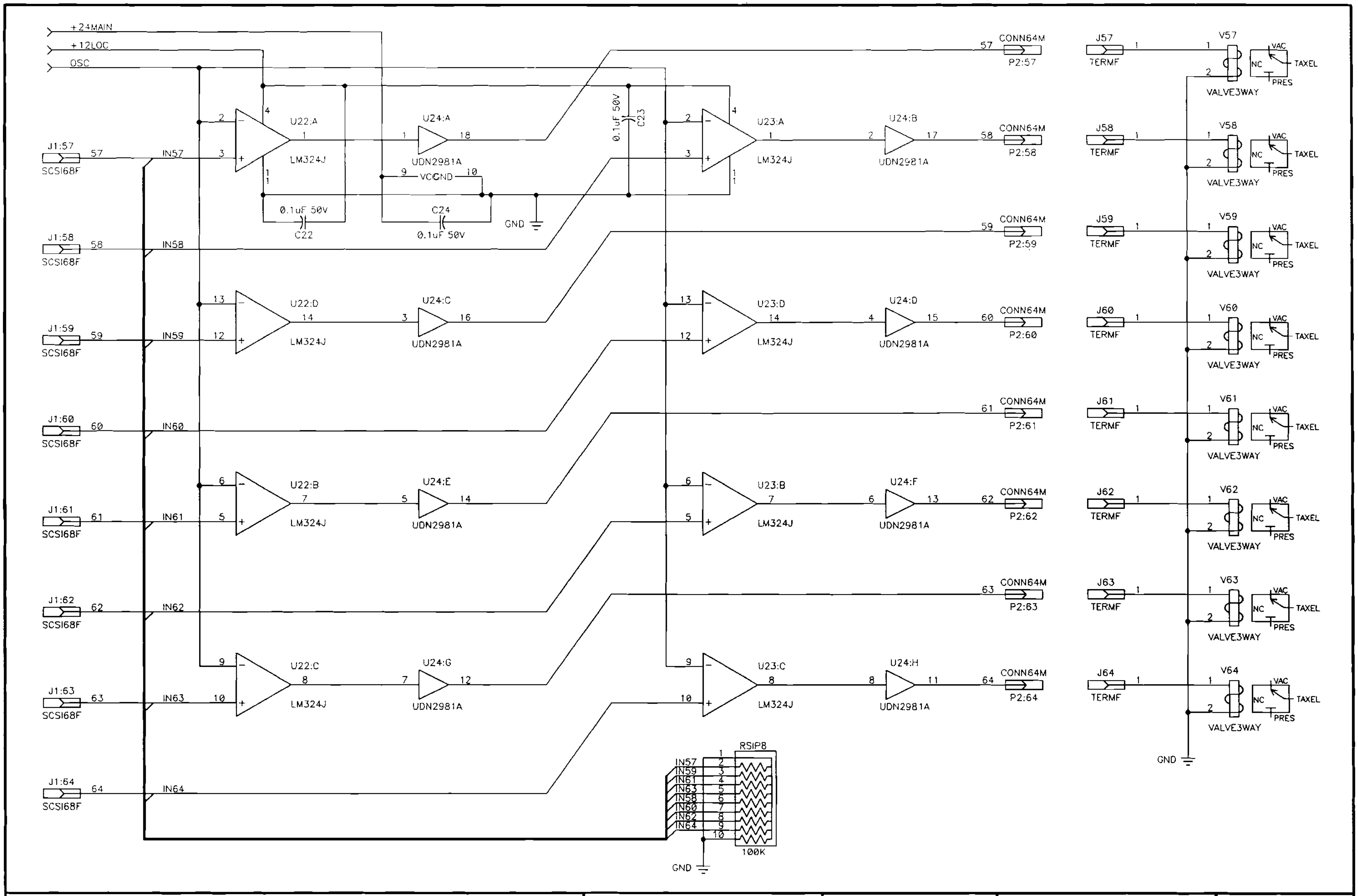

Title: PWM CTRL and VALVE DRIVER: CH 57-64 (PCB ver)
Dwg: VALCTRL3.S09
Sheet 9 of 9
Date: 15 SEPT 94
By: GKW
BEGEJ CORPORATION
Classification: CONFIDENTIAL AND PROPRIETARY INFORMATION.
Distrib: INTERNAL ONLY. NOT FOR PUBLIC RELEASE.

Document File: winword\worddocs\report95\gcfinrep.595
Word Processor: Microsoft WORD for Windows, ver. 6.0